Panasonic

ideas for life

Type 4 PLe SIL3

LIGHT CURTAIN

SF4B SERIES Ver.2

CE Conforming to Machine & EMC Directive

TÜV Certified

c UL us Approved Listing

Conforming to OSHA / ANSI

Certified (SF4B- <V2> only)

(SF4B- -03<V2> only)

GB Conforming to 4584 (Excluding SF4B- -03<V2> and SF4B- G<V2>)

Protection structure IP67

New version with improved environmental resistance performance

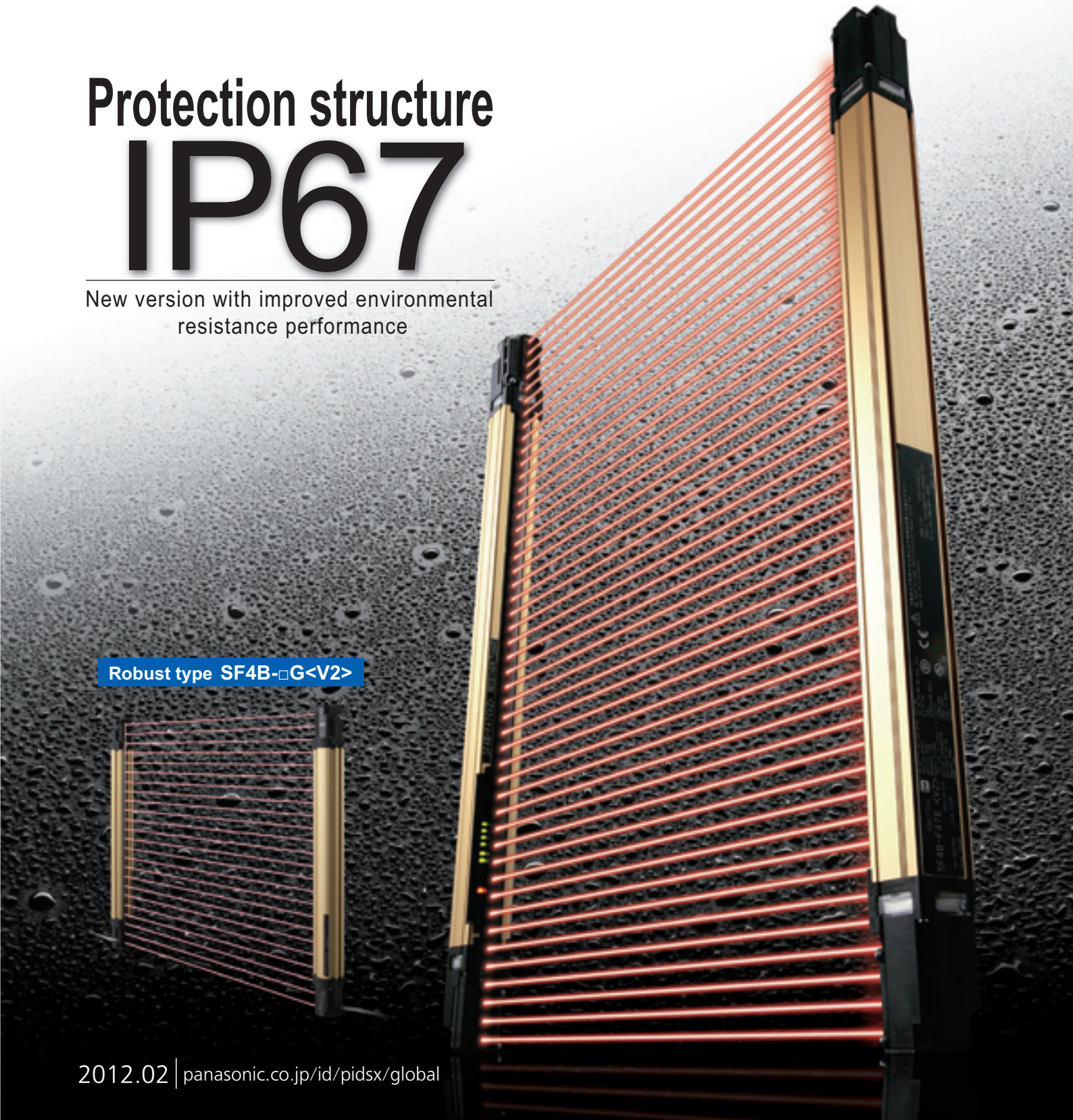

Robust type SF4B-□G<V2>

2012.02 | panasonic.co.jp/id/pidsx/global

Advanced light curtains at the forefront of the industry

Protection structure IP67 is achieved in such size

Improved environmental resistance performance and easier operability

New structure

A seamless structure with least seam area possible is newly developed. The inner unit is protected by a cylindrical inner case. Seams such as unit and lens surfaces have been greatly reduced, so that particles such as oil mists and dust are prevented from getting in, rising its environmental resistance performance.

SF4B series has passed the tests of IP65 and IP67 as specified by IEC / JIS standards. (Ver.2 only)

IEC / JIS	Description
IP65	No harmful effect due to direct water jet from any direction 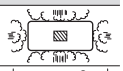
IP67	No water penetration due to immersion in water under specified conditions 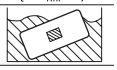

* Refer to each standard for details of test conditions.

Inner case

Cylindrical inner case protects the internal unit.

This new structure does not use adhesive or double-sided tape on the joints like with the previous models. There is no need to worry about water immersion or corrosion such as a coolant causing the adhesive to strip off.

Error details can be understood at a glance

Equipped with a digital error indicator

The system constantly checks the light curtain for problems such as incorrect cable wiring, disconnection, short-circuits, internal circuit problems, and incoming light problems. Details of any electrical problems such as at equipment startup will appear on the digital display. The inconvenience of the previous method of counting the number of LED blinks is no longer needed.

Angle of view is wider and indicators are even more visible

Error number notification means smooth support via telephone

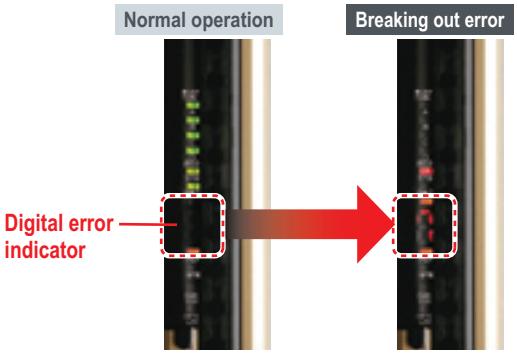

Achieving protection structure IP67 while keeping its slim body.

Locate problems easily and quickly

Light curtain diagnosis software

Free download available from our website.

Simply select the error no. that is displayed on the light curtain on the PC screen, and the section of error will be displayed visually. Coping process is also displayed for a quick resolution of the problem.

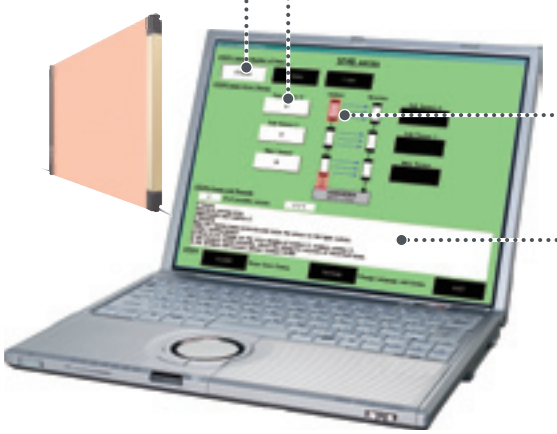

STEP 1 Select the number of connected light curtains (1, 2, 3)

STEP 2 Enter the error condition (error no.) (0, 1…9, F)

Diagnosis starts!

Section of error blinks

Coping process is displayed

- No need to connect to light curtain
- Software can diagnose as many light curtains as possible
- Diagnosis on the spot to ensure maintenance
- Misconnection can also be diagnosed, which contributes to shortened start-up time

[Diagnosis software operation conditions]
Operable in Windows Vista / XP / XP embedded (Jap / Eng).
Approx. 1.5 MB of free space is required.

* Windows® is a registered trademark of Microsoft Corporation in the United States and other countries.

Resistant to impact, lessening damage to workpiece
Robust type SF4B-□G<V2>

Thick and robust housing resistant to impact

The **SF4B-G** series light curtain is enclosed in a 5 mm (0.197 in) thick robust metal case, protecting the workpiece from various types of impact, such as collision or being stepped on.

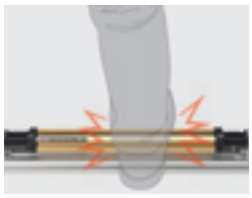

Stepped on - Kicked

Collision - Impact

Loads applied - Dropped

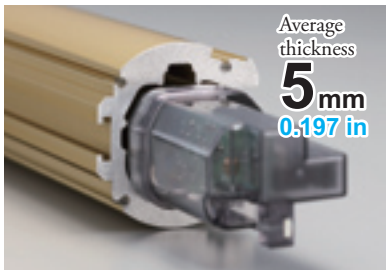

No guard needed

The robust light curtain can be used without an L-shape or U-shape guard, reducing installation and maintenance.

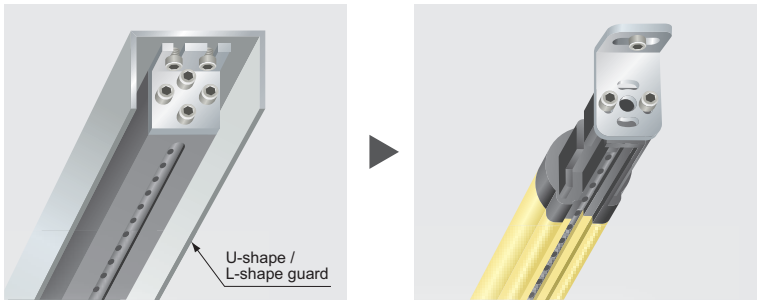

Front protection cover

The front protection cover protects the sensing surface from welding spatter and other grime, and reduces damage due to collisions. The beam axis adjuster can be attached without removing the front protection cover.

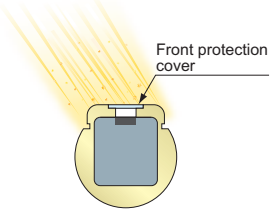

Fully protected sensing surface

The sensing surface is fully protected by narrowing and deepening the exposed area of the sensing surface.

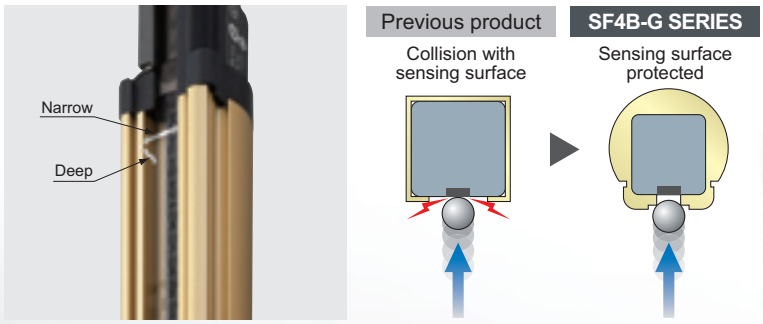

IP67 protected structure

The seamless structure protects the sensor from being exposed to water.

Robust The inner unit is fully protected with a thick metal case. Impact between the workpiece and the sensor is prevented by narrowing and deepening the exposed area of the sensing surface.

Round design minimizes damage to the workpiece

The case is designed so that shock upon impact is dissipated alleviating potential damage to the workpiece in the event of a collision.

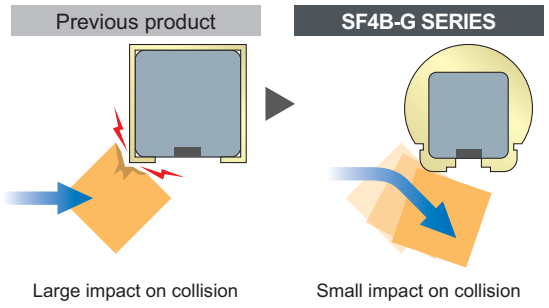

Workpiece not contaminated with paint

The body has a alumite-treated case whereby paint does not stick to the workpiece in the event of a collision.

Enables series connection with standard type possible

The mating cable is standard, allowing the robust and standard types to be connected in series. The mating cable can be removed or attached while the mounting bracket is fixed, allowing easy maintenance.

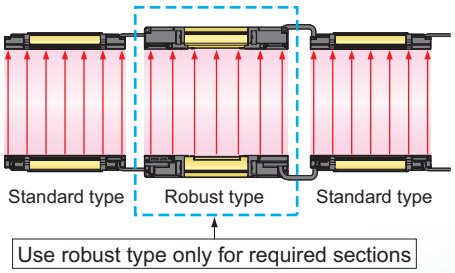

Mounting bracket for simple & secure installation

The light curtain and the mounting bracket are firmly secured with just two bolts.
The light curtain is situated in the center of the mounting bracket, preventing beam axis deviation. The dimple structure makes alignment easy to adjust.

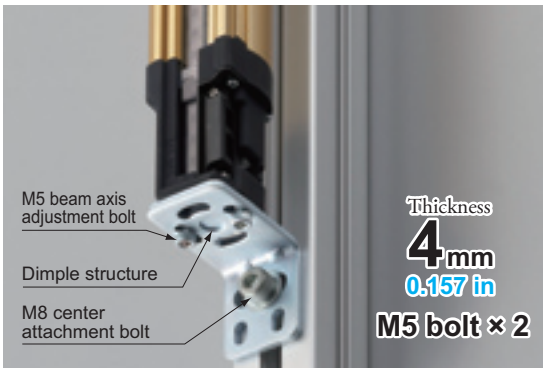

Black and yellow caution tape

Black and yellow striped attention tape is attached to the side of the light curtain, alerting workers to use caution. Hazardous openings are very obvious.

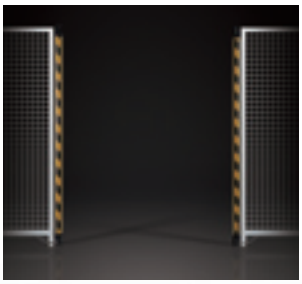

Caution tape
• **SF-TP-BG10**

Special tape
- Fit to width of light curtain
- Made of fabric, making it easy to cut
- Prevents scratches in the event of a collision

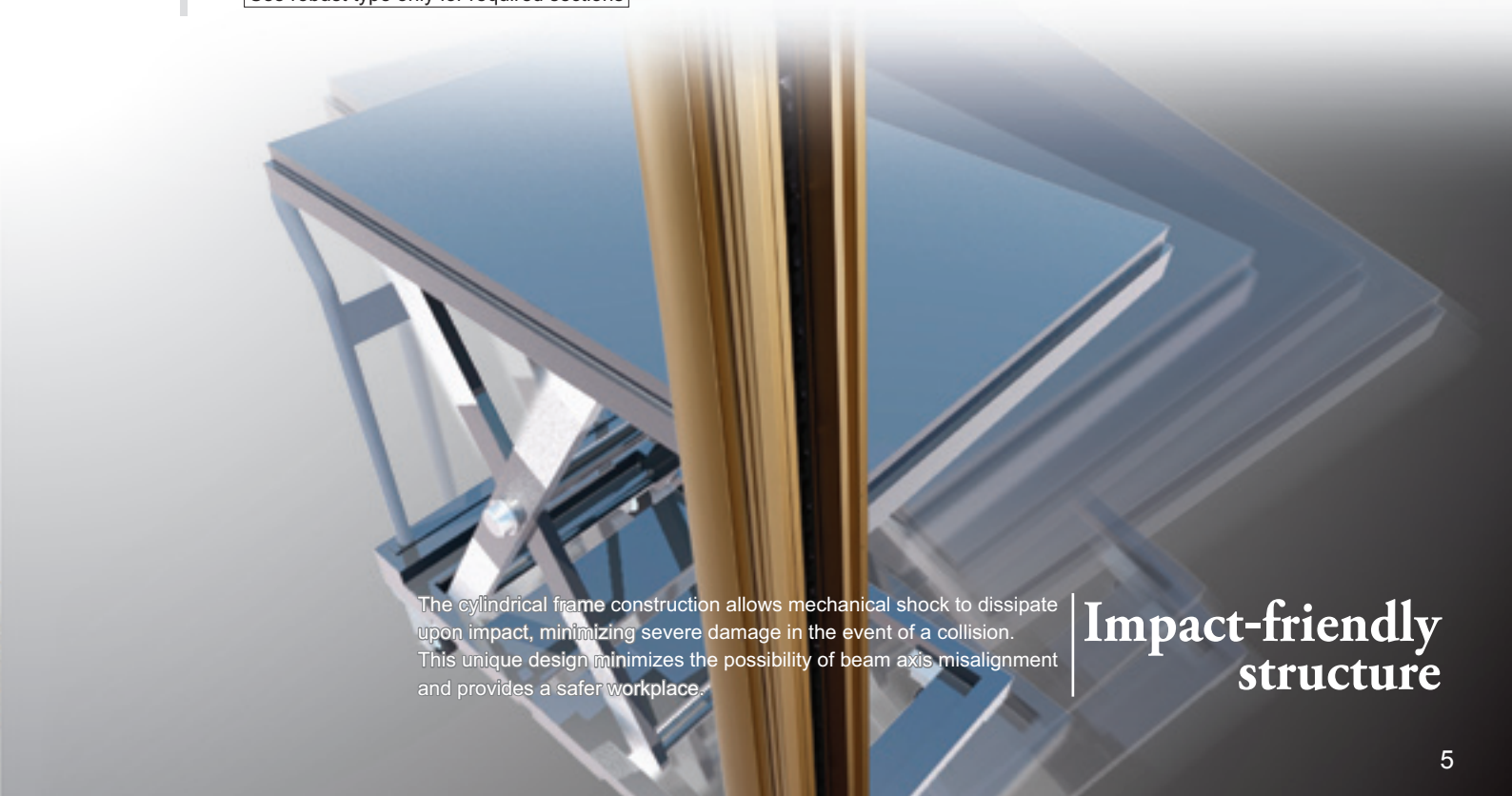

The cylindrical frame construction allows mechanical shock to dissipate upon impact, minimizing severe damage in the event of a collision. This unique design minimizes the possibility of beam axis misalignment and provides a safer workplace.

Impact-friendly structure

A universal design that can be used anywhere in the world

In Europe, America and Japan PNP output and NPN output in a single model!

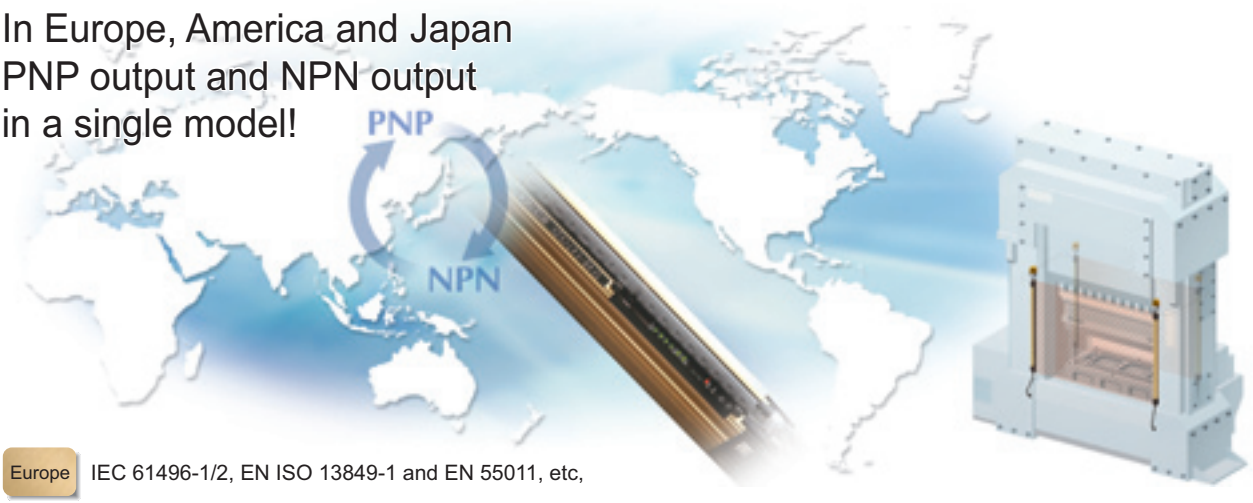

Europe	IEC 61496-1/2, EN ISO 13849-1 and EN 55011, etc,
North America	ANSI/UL 61496-1/2, UL 1998, CSA and OSHA/ANSI, etc,
South Korea	SI-G-35-2005, S2-W-11-2003 (Note)
China	GB 4584 (Note)

Note: Except for **SF4B-□G<V2>**

Supports both PNP and NPN polarities in a single model

The **SF4B** series combines PNP transistor output and NPN transistor output in a single model. Overseas equipment that uses PNP, replacement with NPN sensors, factories that are positively grounded, and transfer of equipment overseas are all situations where the control circuits for a single model are suitable for use worldwide.

■ **Polarity can be changed easily by changing wiring**

When the output polarity setting wire (shielded) is connected to 0 V, PNP output is selected, and when it is connected to 24 V, it switches to NPN output.

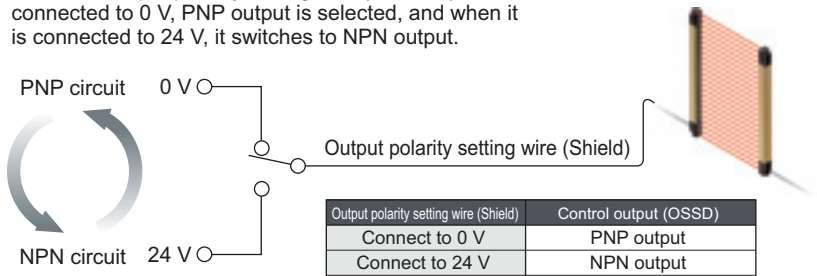

Output polarity setting wire (Shield)	Control output (OSSD)
Connect to 0 V	PNP output
Connect to 24 V	NPN output
Not connected / open	Error

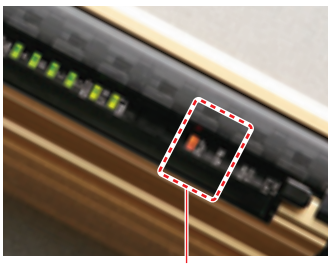

PNP / NPN polarity indicator

Either PNP or NPN side lights depending on which is selected.

Global support for press machine / shear (paper cutting machine) safety

Can be widely used for press machines and other types of equipment from Japan, Europe, North America, South Korea, and China.

●: Available

Type	Model No.	Machinery Directive	EMC Directive	UL Certified	Japanese Press Machine Support	Japanese Shear (Paper Cutter) Support	S-mark certification	Korean Press / Cutting Machine	Chinese GB Compatibility
Light curtains	**SF4B-□<V2>**	●	●	●	——	——	●	——	●
	SF4B-□-01<V2>	●	●	●	● (No.TA347)	● (No.TA363)	—	——	●
	SF4B-□G<V2>	●	●	●	——	——	—	——	—
	SF4B-□-03<V2>	●	●	●	——	——	—	● (No.09-AV4BI-0001 to 0009)	—
Control units	**SF-C11**	●	●	●	● (No.TA348) (Note 1)	——	●	——	—
	SF-C12	●	●	●	——	——	—	——	—
	SF-C13	●	●	●	● (No.TA349) (Note 1)	——	●	——	—
	SF-C14EX	●	●	●	——	——	—	——	—
	SF-C14EX-01	●	●	●	● (No.TA350) (Note 1)	——	—	——	—

Note: In combination with **SF4B-□-01<V2>**. Please inquire for the details.

A unified response time of 14 ms for all models makes setup easy

A fast response time of 14 ms has been achieved regardless of the number of beam channels, the beam axis pitches and the number of units connected in series. This reduces calculation work required for the safety distance.

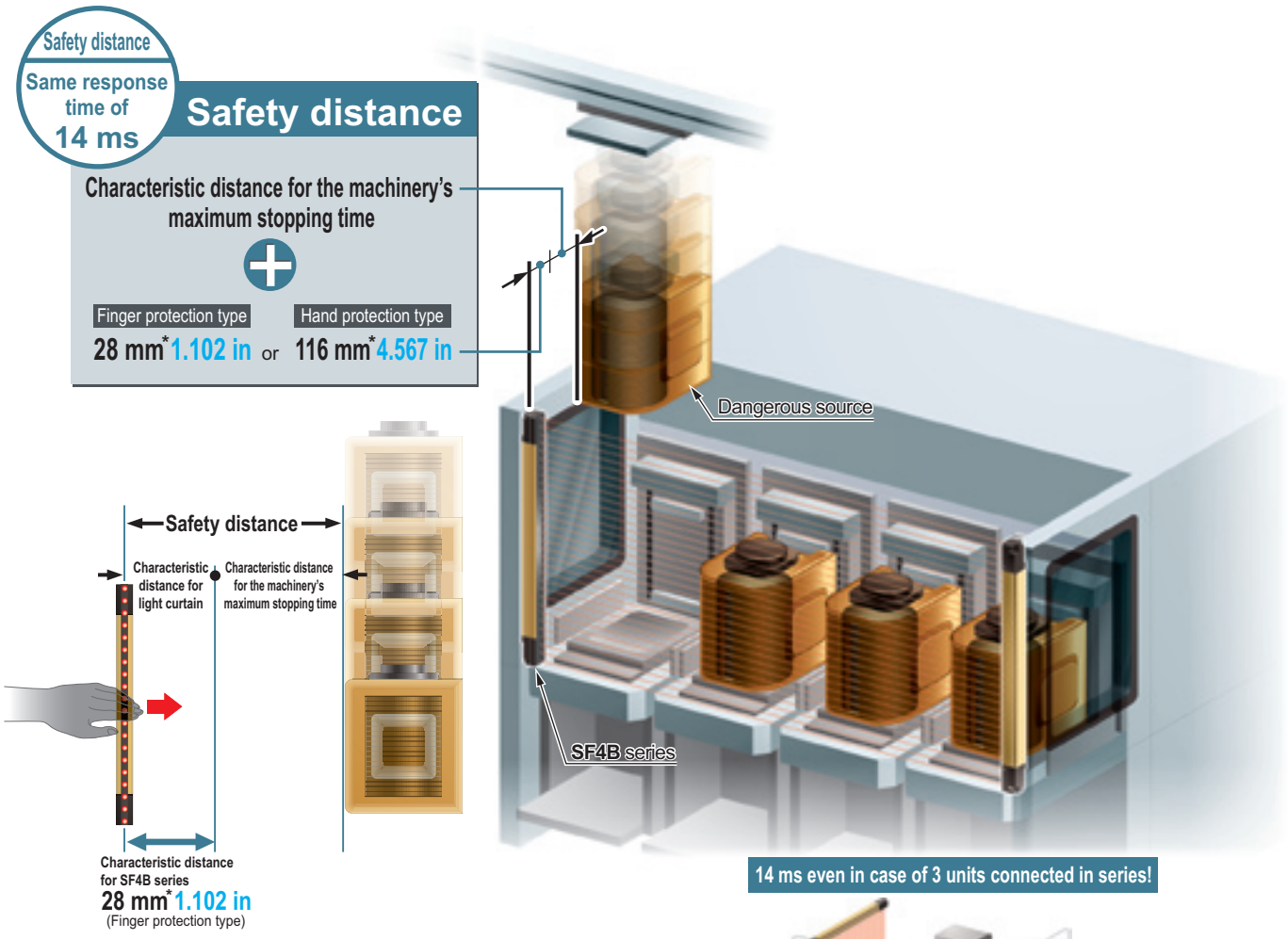

* This is the characteristic safety distance for the light curtain as defined by ISO 13855. Calculate the safety distance by including the machinery's maximum stopping time. Furthermore refer to the relevant standards of the region where this device is to be used, and then install this device.

14 ms even in case of 3 units connected in series!

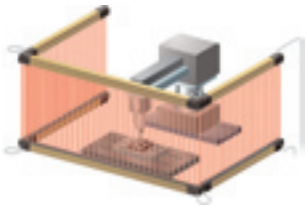

* Series connection allows max. 3 sets or a total of up to 192 beam channels.

It is possible to select from among each three types of standard/Robust types according to the worksite

A wide range of variations are available with protective heights of 230 to 1,910 mm 9.055 to 75.197 in (1,270 mm 50.000 in for the finger protection type). Mixing six types in a series connection is also possible.

Finger protection type **SF4B-F□(G)**	Hand protection type **SF4B-H□(G)**	Arm / Foot protection type **SF4B-A□(G)**
Minimum sensing object ø14 mm ø0.551 in (10 mm 0.394 in beam pitch)	Minimum sensing object ø25 mm ø0.984 in (20 mm 0.787 in beam pitch)	Minimum sensing object ø45 mm ø1;772 in (40 mm 1.575 in beam pitch)
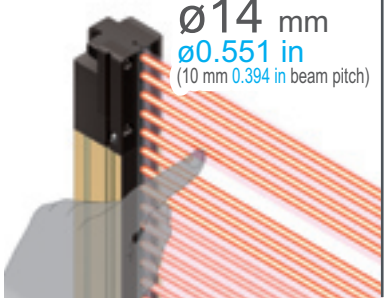	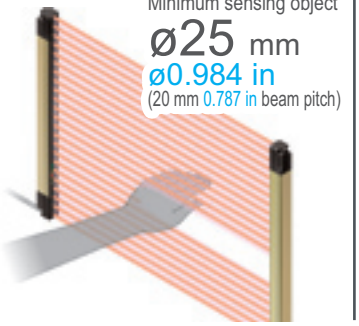	

Muting control function is built into light curtain Safety circuits are selectable

A muting control function is provided to increase both safety and productivity

The light curtain is equipped with a muting control function that causes the line to stop only when a person passes through the light curtain, and does not stop the line when an object passes through. The muting sensors and muting lamps can be connected directly to the light curtain so that a exclusive controller is not required for muting. This both reduces costs and increases safety and productivity.

(excluding **SF4B-□-03<V2>**)

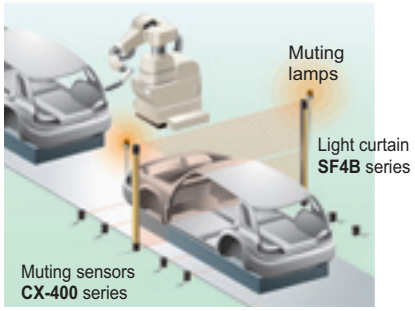

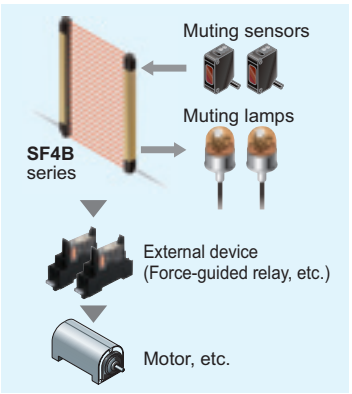

Override function allows the line to be restarted smoothly after it has stopped while muting control was active

In case the power turns off while the light curtain has been interrupted by an object or in case the line stops before the muting conditions have been established (if only one muting sensor has been interrupted), the line can be restarted smoothly without having to remove the object that is interrupting the light curtain.

(excluding **SF4B-□-03<V2>**)

(e.g.) When power turns off while light curtain was interrupted

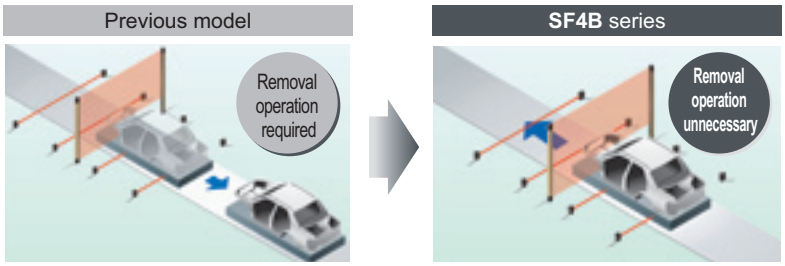

Object must be removed before restart

Smooth restart

Equipped with a safety circuit that does not require an exclusive safety relay unit

The light curtain has a built-in external device monitoring function (such as for fused relay monitoring) and an interlock function. The safety circuit is constructed so that a separate safety relay unit is not needed, and the control board has become smaller to help to contribute to lower costs.

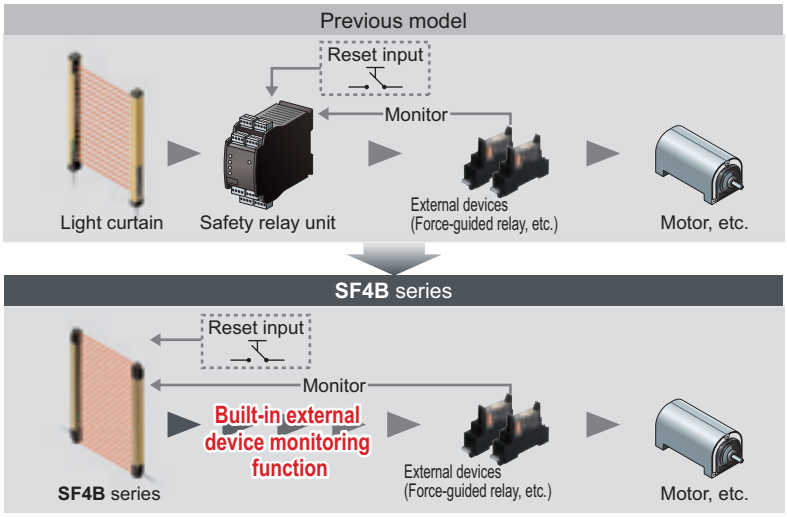

No safety relay unit needed

Smaller control board

- Safety relay
  Panasonic Corporation
  SF series

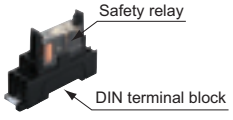

Note: Contact the manufacturers for details on the recommended products.

A commitment to design that is easy to use

Beam-axis alignment indicators show the incident light position at a glance

Beam-axis alignment indicators display the beam channels of the light curtain in four blocks. When the beam channel at the bottommost channel (or topmost channel), which is used as a reference for beam-axis alignments, is correctly aligned, the LED blinks red. After this, each block lights red as the beam axes successively become aligned. When all channel beam axes are aligned, all LEDs light green. The display also has a stability indicator (STB) added so that setup can be carried out with greater stability.

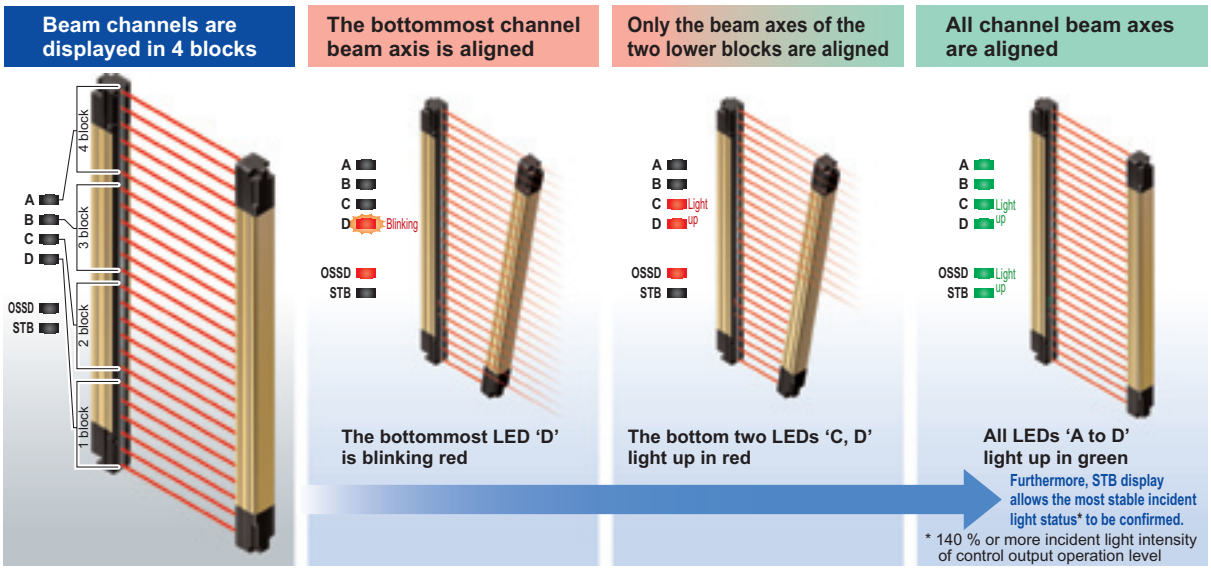

Laser alignment tool for easy installation

The tool performs beam-axis alignment using a laser beam spot. As the tool is battery-operated, it is possible to perform beam-axis alignment before actual powering on the equipment.

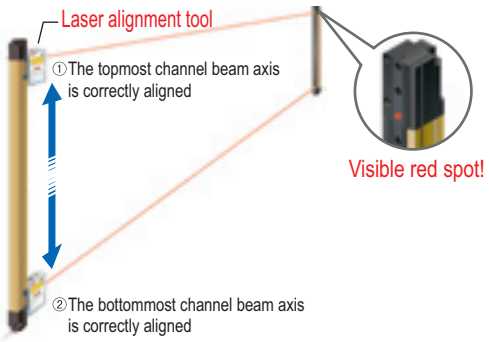

Greatly improved ease of installation (excluding SF4B-□G)

The hexagon-socket head bolts used for aligning the beam axis can be tightened from the front of the light curtain. Beam adjustment can be carried out easily while checking on the bolts. Also, the beam-axis alignment part is directly fixed by M5 bolts to prevent beam misalignment.

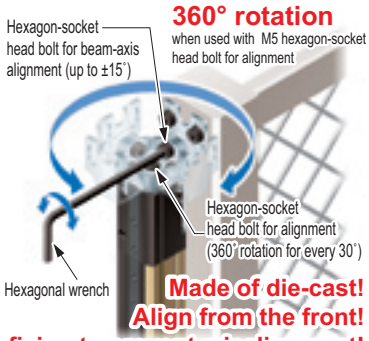

Easy to distinguish receiver and emitter

Emitter is in gray; receiver is in black. Whether during startup or maintenance, troubles due to incorrect wiring or false recognition can be greatly reduced. Moreover, model No. can be confirmed from the front face of the light curtain.

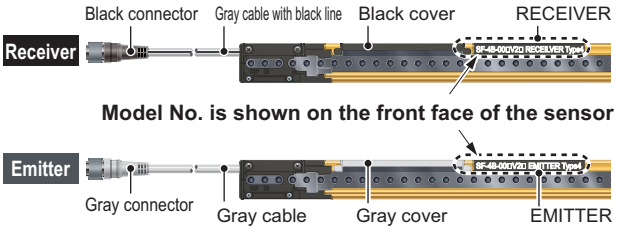

Mutual interference is reduced without needing for interference prevention lines

The light curtain is equipped with the ELCA (Extraneous Light Check & Avoid) function. Because it automatically shifts the scan timing of the light curtain in order to avoid interference, it is not necessary to wire interference prevention lines between machineries.

Reducing the number of malfunctions caused by extraneous light

Double scanning method and retry processing are two new functions exclusive to our company, which are effective in eliminating the effects of momentary extraneous light from peripheral equipment. The reduction in operating errors caused by extraneous light reduces frequent stopping of machinery.

Options exclusive for light curtain are available for an easy construction of safety circuit

Handy-controller SFB-HC* that enables the user to select a variety of settings SFB-HC

Separate muting control function for each beam channel

The handy-controller **SFB-HC*** (optional) can be used to carry out muting control for specified beam channels only. Because individual beam channel can be specified to suit the object, separate guards to prevent entry do not need to be set up.

While muting control is active (line operating)

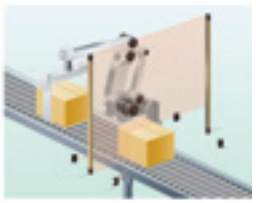

Line stopped

For example, depending on the height of the object, the muting function can be activated for 10 beam channels starting from the bottom, so that if the 11th or subsequent beam channels are interrupted, it is judged that a person has entered the area and the line stops.

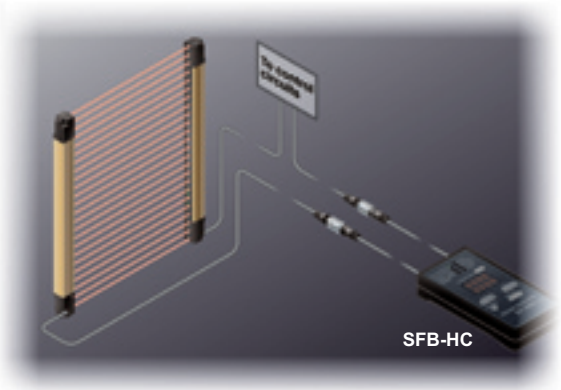

* A handy-controller cannot be used with the **SF4B-□-01<V2>**, **SF4B-□-03<V2>** and the **SF-C14EX-01**.

Any valid beam channels can be selected The SF4B series incorporates a fixed blanking function.

The **SF4B** series is equipped with a fixed blanking function which allows specific beam channels to be selectively interrupted without causing the control output (OSSD) to output the OFF signal. This function is convenient for use with applications in which certain fixed obstacles tend to block specific beam channels. Furthermore, this function provides greater safety as the control output (OSSD) will automatically output the OFF signal if the fixed obstacles are subsequently removed from the sensing area.

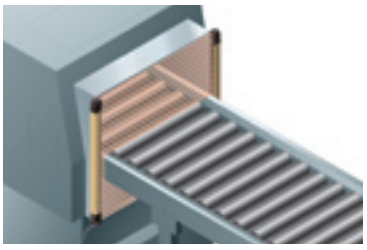

Non-specified beam channels can be deactivated The SF4B series incorporates a floating blanking function.

1, 2 or 3 non-specified beam channels can be deactivated. If the number of beam channels that are blocked is less than or equal to the set number of beam channels, then the control output (OSSD) will not output the OFF signal. This function is useful in the event when the positions of obstacles within the sensing area must be changed during object rearrangement, or when an object passes through the light curtain's sensing area.

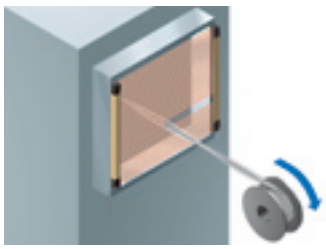

Note: When the floating blanking function is used, the size of the min. sensing object is changed. Refer to "**PRECAUTIONS FOR PROPER USE**" (p.36) for details.

Auxiliary output has selectable output configuration

Mode No.	Description
0	Negative logic of the control output (OSSD 1, OSSD 2) (factory setting)
1	Positive logic of the control output (OSSD 1, OSSD 2)
2	For emission: output ON, For non-emission: output OFF
3	For emission: output OFF, For non-emission: output ON
4	For unstable incident beam: OFF (Note 1)
5	For unstable incident beam: ON (Note 1)
6	For muting: ON
7	For muting: OFF
8	For beam received: ON, For beam interrupted: OFF (Note 2)
9	For beam received: OFF, For beam interrupted: ON (Note 2)

Notes: 1) The output cannot be used while the fix blanking function, floating blanking function or the muting function is activated.
2) This device outputs the beam received / interrupted state under activating the auxiliary output switching function using the handy controller irrespective of activating other functions, fixed blanking function, floating blanking function, and muting function.

A variety of other functions can be selected

Emission intensity control function
This function reduces the amount of emitting light. The two modes, normal mode and short mode, can be selected. The factory setting is set to the normal mode for the emission intensity control function.

Setting monitoring function
This function allows the user to confirm the details of each light curtain setting.

Protection function
Unless the password is not input, any setting change of the light curtain cannot be allowed. The factory setting is set to invalid for the protect function.

Copy function
Allows settings details to be copied into other light curtains. In the event that the same setting must be input into several different light curtains, this function will reduce the time required for the input of settings.

Muting lamp diagnosis setting
When the muting lamp diagnosis is disabled, the muting function will continue to operate even if the lamp is blown.

* Refer to the **SF4B<V2>** manual for details.

Lineup of exclusive control units

SF-C10 series

SF-CL1T264T

Supports both PNP and NPN polarities SF-C10 series

A single unit can be used for PNP / NPN input switching, reducing the number of parts that need to be registered.

Plug-in connector type control unit SF-C11

Connecting to the light curtain is done using plug-in connector connections, which shorten setup and replacement time.

Robust type control unit SF-C12

The strong metal enclosure has a built-in safety relay. It has an IP65 protection structure, so that it can be set up individually without the need to be inserted into a control panel.

Slim type control unit SF-C13

Having a thickness of 22.5 mm 0.886 in, it can be inserted even into narrow spaces inside panels.

Application expansion unit SF-C14EX(-01)

Three safety circuit systems (Light curtain output, Muting control and Emergency stop button) are collected into a single unit.

Remote I/O unit SF-CL1T264T

Connect light curtain and safety components to the safety field network, CC-Link Safety, and a single network is complete while achieving wire-saving.

* Refer to our website or general catalog for details.

PRODUCT CONFIGURATION

Mounting bracket and mating cable are optional.

Standard components (8-core cable)

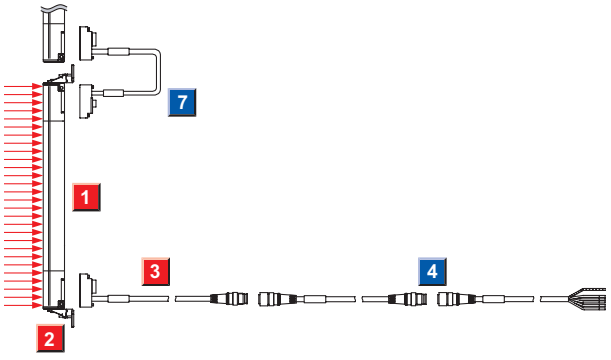

		Component parts
Required	1	Light curtain
	2	Mounting bracket (Optional)
	3	8-core bottom cap cable (Optional)
	4	8-core extension cable (Optional, use for cable extension)
	7	Cable for series connection (Optional, use for connection in series)

Muting control components (12-core cable, with interference prevention wire)

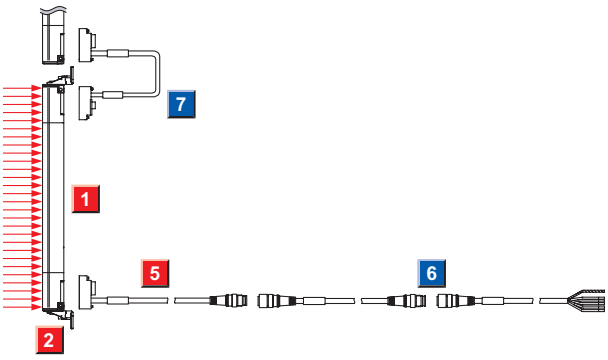

		Component parts
Required	1	Light curtain
	2	Mounting bracket (Optional)
	5	12-core bottom cap cable (Optional)
	6	12-core extension cable (Optional, use for cable extension)
	7	Cable for series connection (Optional, use for connection in series)

ORDER GUIDE

1 Light curtains

Mounting bracket and bottom cap cable are not supplied with the light curtain. Be sure to order them separately.

Type		Appearance	Operating range (Note 1)	Model No. (Note 2)			Number of beam channels	Protective height (mm in)
					SFB-HC non-compatible	Korean Press compliant (SFB-HC non-compatible)		
Finger protection type	Min. sensing object ø14 mm ø0.551 in (10 mm 0.394 in beam pitch)	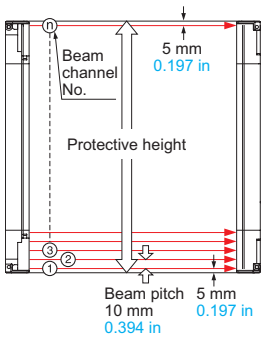	0.3 to 7 m 0.984 to 22.966 ft	SF4B-F23<V2>	SF4B-F23-01<V2>	SF4B-F23-03<V2>	23	230 9.055
				SF4B-F31<V2>	SF4B-F31-01<V2>	SF4B-F31-03<V2>	31	310 12.205
				SF4B-F39<V2>	SF4B-F39-01<V2>	SF4B-F39-03<V2>	39	390 15.354
				SF4B-F47<V2>	SF4B-F47-01<V2>	SF4B-F47-03<V2>	47	470 18.504
				SF4B-F55<V2>	SF4B-F55-01<V2>	SF4B-F55-03<V2>	55	550 21.654
				SF4B-F63<V2>	SF4B-F63-01<V2>	SF4B-F63-03<V2>	63	630 24.803
				SF4B-F71<V2>	SF4B-F71-01<V2>	SF4B-F71-03<V2>	71	710 27.953
				SF4B-F79<V2>	SF4B-F79-01<V2>	SF4B-F79-03<V2>	79	790 31.102
				SF4B-F95<V2>	SF4B-F95-01<V2>	SF4B-F95-03<V2>	95	950 37.402
				SF4B-F111<V2>	SF4B-F111-01<V2>	SF4B-F111-03<V2>	111	1,110 43.701
				SF4B-F127<V2>	SF4B-F127-01<V2>	SF4B-F127-03<V2>	127	1,270 50.000
Hand protection type	Min. sensing object ø25 mm ø0.984 in (20 mm 0.787 in beam pitch)	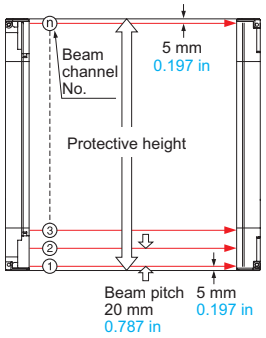	0.3 to 9 m 0.984 to 29.528 ft	SF4B-H12<V2>	SF4B-H12-01<V2>	SF4B-H12-03<V2>	12	230 9.055
				SF4B-H16<V2>	SF4B-H16-01<V2>	SF4B-H16-03<V2>	16	310 12.205
				SF4B-H20<V2>	SF4B-H20-01<V2>	SF4B-H20-03<V2>	20	390 15.354
				SF4B-H24<V2>	SF4B-H24-01<V2>	SF4B-H24-03<V2>	24	470 18.504
				SF4B-H28<V2>	SF4B-H28-01<V2>	SF4B-H28-03<V2>	28	550 21.654
				SF4B-H32<V2>	SF4B-H32-01<V2>	SF4B-H32-03<V2>	32	630 24.803
				SF4B-H36<V2>	SF4B-H36-01<V2>	SF4B-H36-03<V2>	36	710 27.953
				SF4B-H40<V2>	SF4B-H40-01<V2>	SF4B-H40-03<V2>	40	790 31.102
				SF4B-H48<V2>	SF4B-H48-01<V2>	SF4B-H48-03<V2>	48	950 37.402
				SF4B-H56<V2>	SF4B-H56-01<V2>	SF4B-H56-03<V2>	56	1,110 43.701
				SF4B-H64<V2>	SF4B-H64-01<V2>	SF4B-H64-03<V2>	64	1,270 50.000
			0.3 to 7 m 0.984 to 22.966 ft	SF4B-H72<V2>	SF4B-H72-01<V2>	SF4B-H72-03<V2>	72	1,430 56.299
				SF4B-H80<V2>	SF4B-H80-01<V2>	SF4B-H80-03<V2>	80	1,590 62.598
				SF4B-H88<V2>	SF4B-H88-01<V2>	SF4B-H88-03<V2>	88	1,750 68.898
				SF4B-H96<V2>	SF4B-H96-01<V2>	SF4B-H96-03<V2>	96	1,910 75.197
Arm / Foot protection type	Min. sensing object ø45 mm ø1.772 in (40 mm 1.575 in beam pitch)	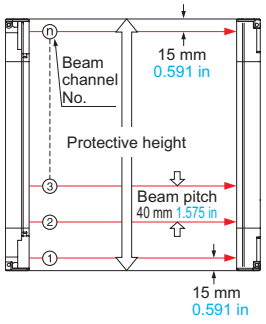	0.3 to 9 m 0.984 to 29.528 ft	SF4B-A6<V2>	SF4B-A6-01<V2>	–	6	230 9.055
				SF4B-A8<V2>	SF4B-A8-01<V2>	–	8	310 12.205
				SF4B-A10<V2>	SF4B-A10-01<V2>	–	10	390 15.354
				SF4B-A12<V2>	SF4B-A12-01<V2>	–	12	470 18.504
				SF4B-A14<V2>	SF4B-A14-01<V2>	–	14	550 21.654
				SF4B-A16<V2>	SF4B-A16-01<V2>	–	16	630 24.803
				SF4B-A18<V2>	SF4B-A18-01<V2>	–	18	710 27.953
				SF4B-A20<V2>	SF4B-A20-01<V2>	–	20	790 31.102
				SF4B-A24<V2>	SF4B-A24-01<V2>	–	24	950 37.402
				SF4B-A28<V2>	SF4B-A28-01<V2>	–	28	1,110 43.701
				SF4B-A32<V2>	SF4B-A32-01<V2>	–	32	1,270 50.000
			0.3 to 7 m 0.984 to 22.966 ft	SF4B-A36<V2>	SF4B-A36-01<V2>	–	36	1,430 56.299
				SF4B-A40<V2>	SF4B-A40-01<V2>	–	40	1,590 62.598
				SF4B-A44<V2>	SF4B-A44-01<V2>	–	44	1,750 68.898
				SF4B-A48<V2>	SF4B-A48-01<V2>	–	48	1,910 75.197

Notes: 1) The operating range is the possible setting distance between the emitter and the receiver. The light curtain can detect an object less than 0.3 m 0.984 ft away.

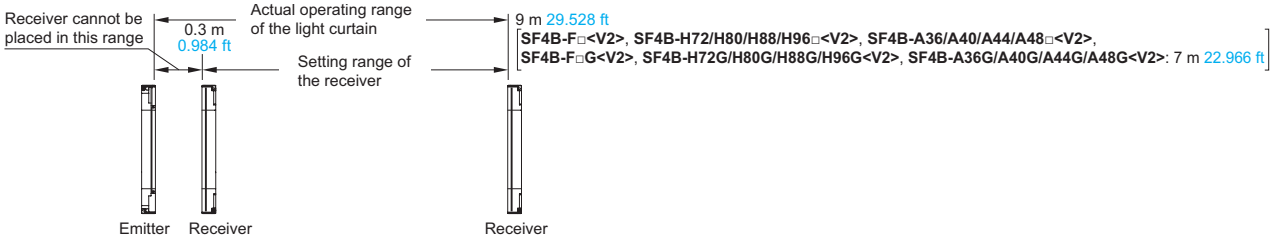

2) The model No. with "**E**" shown on the label affixed to the product is the emitter, "**D**" shown on the label is the receiver.
(e.g.) Emitter of **SF4B-F23<V2>**: **SF4B-F23E<V2>**, Receiver of **SF4B-F23<V2>**: **SF4B-F23D<V2>.**

ORDER GUIDE

1 Light curtains (Robust type)

Mounting bracket and bottom cap cable are not supplied with the light curtain. Be sure to order them separately.

Type	Appearance	Operating range	Model No.	Number of beam channels	Protective height (mm in)
Finger protection type Min. sensing object ø14 mm ø0.551 in (10 mm 0.394 in beam pitch)	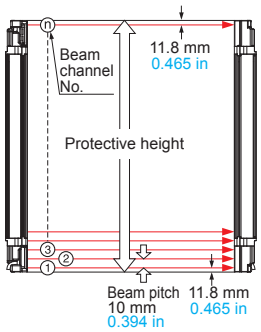	0.3 to 7 m 0.984 to 22.966 ft	**SF4B-F23G<V2>**	23	244 9.606
			SF4B-F31G<V2>	31	324 12.756
			SF4B-F39G<V2>	39	404 15.906
			SF4B-F47G<V2>	47	484 19.055
			SF4B-F55G<V2>	55	564 22.205
			SF4B-F63G<V2>	63	644 25.354
			SF4B-F71G<V2>	71	724 28.504
			SF4B-F79G<V2>	79	804 31.654
			SF4B-F95G<V2>	95	964 37.953
			SF4B-F111G<V2>	111	1,124 44.252
			SF4B-F127G<V2>	127	1,284 50.551
Hand protection type Min. sensing object ø25 mm ø0.984 in (20 mm 0.787 in beam pitch)	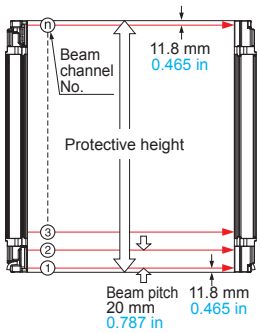	0.3 to 9 m 0.984 to 29.529 ft	**SF4B-H12G<V2>**	12	244 9.606
			SF4B-H16G<V2>	16	324 12.756
			SF4B-H20G<V2>	20	404 15.906
			SF4B-H24G<V2>	24	484 19.055
			SF4B-H28G<V2>	28	564 22.205
			SF4B-H32G<V2>	32	644 25.354
			SF4B-H36G<V2>	36	724 28.504
			SF4B-H40G<V2>	40	804 31.654
			SF4B-H48G<V2>	48	964 37.953
			SF4B-H56G<V2>	56	1,124 44.252
			SF4B-H64G<V2>	64	1,284 50.551
		0.3 to 7 m 0.984 to 22.966 ft	**SF4B-H72G<V2>**	72	1,444 56.850
			SF4B-H80G<V2>	80	1,604 63.150
			SF4B-H88G<V2>	88	1,764 69.449
			SF4B-H96G<V2>	96	1,924 75.748
Arm / Foot protection type Min. sensing object ø45 mm ø1.772 in (40 mm 1.575 in beam pitch)	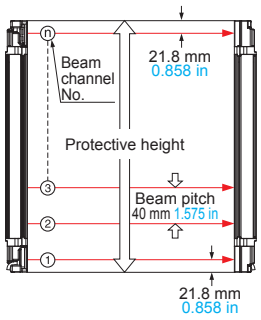	0.3 to 9 m 0.984 to 29.529 ft	**SF4B-A6G<V2>**	6	244 9.606
			SF4B-A8G<V2>	8	324 12.756
			SF4B-A10G<V2>	10	404 15.906
			SF4B-A12G<V2>	12	484 19.055
			SF4B-A14G<V2>	14	564 22.205
			SF4B-A16G<V2>	16	644 25.354
			SF4B-A18G<V2>	18	724 28.504
			SF4B-A20G<V2>	20	804 31.654
			SF4B-A24G<V2>	24	964 37.953
			SF4B-A28G<V2>	28	1,124 44.252
			SF4B-A32G<V2>	32	1,284 50.551
		0.3 to 7 m 0.984 to 22.966 ft	**SF4B-A36G<V2>**	36	1,444 56.850
			SF4B-A40G<V2>	40	1,604 63.150
			SF4B-A44G<V2>	44	1,764 69.449
			SF4B-A48G<V2>	48	1,924 75.748

Differences from standard type

The Robust type **SF4B-□G<V2>** is different from the standard type **SF4B-□<V2>** in the following ways:
• Sensing width (protective height) • Profile • Net weight • Mounting bracket
• Large alignment tool • Noncompliant with Japanese and Korean press standard
• Noncompliant with Korean regulations • Noncompliant with Chinese GB standard (acquisition planned)
Other specifications, input/output circuits, and options are common to the standard type.

ORDER GUIDE

2 Mounting brackets

Mounting bracket is not supplied with the light curtain. Be sure to order it separately.

Designation		Model No.	Description
Rear / side mounting bracket (Material: Iron)	M8 rear mounting bracket	**MS-SFB-7-T**	For rear direction. Allows the light curtain to be mounted at the rear with one M8 hexagon-socket-head bolt. (4 pcs. per set for emitter and receiver)
	M8 side mounting bracket	**MS-SFB-8-T**	For side direction. Allows the light curtain to be mounted at the side with one M8 hexagon-socket-head bolt. (4 pcs. per set for emitter and receiver)
	M8 rear / side mounting bracket set	**MS-SFB-1-T2**	Can be used as either a rear mounting bracket **MS-SFB-7-T** or a side mounting bracket **MS-SFB-8-T** depending on mounting direction. (4 pcs. per set for emitter and receiver)
360° mounting bracket (Material: Die-cast zinc alloy) * Light curtain can revolve 360° horizontally.	Standard mounting bracket	**MS-SFB-1**	Used to mount the light curtain on the rear surface and side surface. (4 pcs. per set for emitter and receiver)
	M8 mounting bracket	**MS-SFB-1-T**	Allows the light curtain to be mounted at the rear and side with one M8 hexagon-socket-head bolt. (4 pcs. per set for emitter and receiver)
	Pitch adapter bracket	**MS-SFB-4**	Used as the mounting bracket when changing over a previous light curtain with a protective height of 200 mm 7.874 in or more to the **SF4B** series. It is installed using two M5 hexagon-socket-head bolts. (4 pcs. per set for emitter and receiver)
	M8 pitch adapter bracket	**MS-SFB-4-T**	Used as the mounting bracket when changing over a previous light curtain with a protective height of 200 mm 7.874 in or more to the **SF4B** series. It is installed using one M8 hexagon-socket-head bolt. (4 pcs. per set for emitter and receiver)
Standard L mounting bracket (For **SF4B-□G**)		**MS-SF4BG-1**	Mounting is possible behind or at the side of the light curtain. Mount with two M5 bolts or one M8 bolt. (4 pcs. per set for emitter and receiver)
Dead zoneless mounting bracket (Material: Die-cast zinc alloy)		**MS-SFB-3**	Mounting with no dead zone is possible so that the mounting bracket does not project past the protective height. (4 pcs. per set for emitter and receiver)
Dead zoneless mounting bracket (For **SF4B-□G**) Material: Mounting bracket ...SPCC (Trivalent chrome plated) Supporting bracket ...PPS		**MS-SF4BG-3**	Allows light curtains to be installed cose together, or in locations with installation restrictions due to equipment columns or jigs. (4 pcs. per set for emitter and receiver)

M8 rear mounting bracket

- **MS-SFB-7-T**
- **MS-SFB-1-T2 (Rear mounting)**

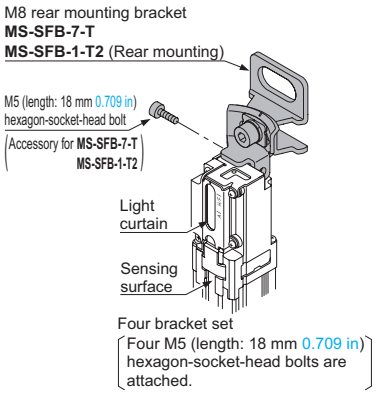

Four bracket set
Four M5 (length: 18 mm 0.709 in) hexagon-socket-head bolts are attached.

M8 side mounting bracket

- **MS-SFB-8-T**
- **MS-SFB-1-T2 (Side mounting)**

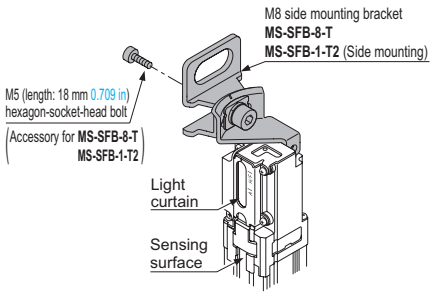

Four bracket set
Four M5 (length: 18 mm 0.709 in) hexagon-socket-head bolts are attached.

Standard mounting bracket

- **MS-SFB-1**

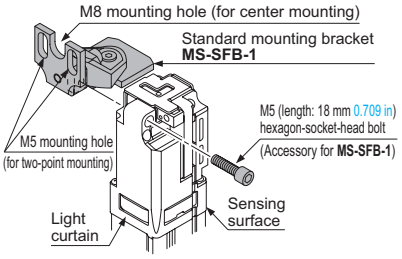

Four bracket set
Four M5 (length: 18 mm 0.709 in) hexagon-socket-head bolts are attached.

ORDER GUIDE

M8 mounting bracket

• **MS-SFB-1-T**

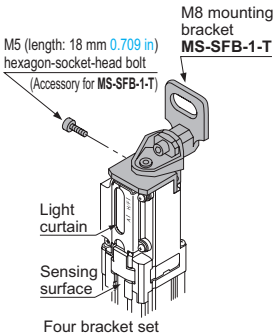

Four bracket set
Four M5 (length: 18 mm 0.709 in) hexagon-socket-head bolts are attached.

Pitch adapter bracket

• **MS-SFB-4**

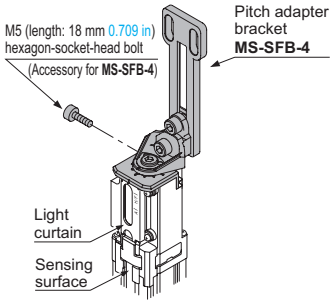

Four bracket set
Four M5 (length: 18 mm 0.709 in) hexagon-socket-head bolts are attached.

M8 pitch adapter bracket

• **MS-SFB-4-T**

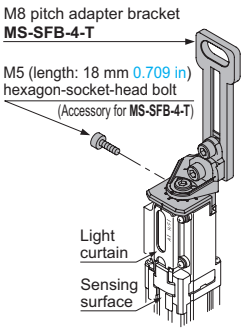

Four bracket set
Four M5 (length: 18 mm 0.709 in) hexagon-socket-head bolts are attached.

Dead zoneless mounting bracket

• **MS-SFB-3**

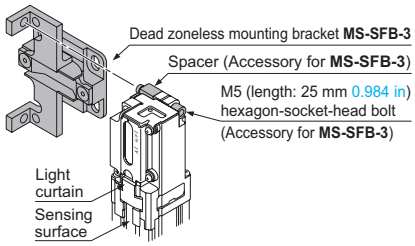

Four bracket set
Four M5 (length: 25 mm 0.984 in) hexagon-socket-head bolts and four spacers are attached.

Standard L mounting bracket (For SF4B-□G)

• **MS-SF4BG-1**

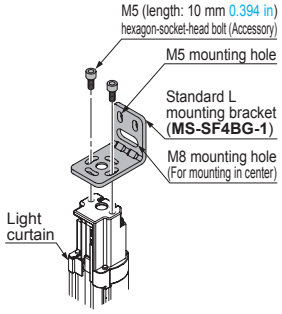

Four bracket set
Eight M5 (length: 10 mm 0.394 in) hexagon-socket-head bolts are attached.

Dead zoneless mounting bracket (For SF4B-□G)

• **MS-SF4BG-3**

When using M5 hexagon-socket-head bolt (Rear mounting)

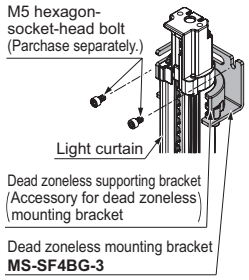

When using M8 hexagon bolt (Rear mounting)

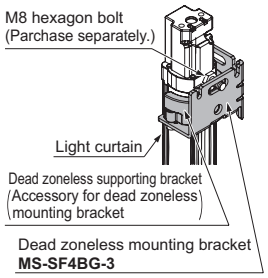

Four bracket set
Twelve M5 (length: 8 mm 0.315 in) hexagon-socket-head bolts and four nut slots are attached.

ORDER GUIDE

3 4 5 6 7 Mating cable / Extension cable / Cables for series connection

Mating cable is not supplied with the light curtain. Be sure to order it separately.

Type			Appearance	Model No.	Length / Net weight	Description
Standard components (8-core cable)	3 Bottom cap cable	Discrete wire	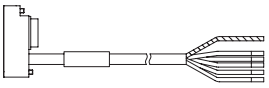	**SFB-CCB3**	Length: 3 m 9.843 ft Net weight: 370 g approx. (2 cables)	Used for connecting to the light curtain and to other cables or the **SF-C13** control unit. Two cables per set for emitter and receiver
				SFB-CCB7	Length: 7 m 22.966 ft Net weight: 820 g approx. (2 cables)	
				SFB-CCB10	Length: 10 m 32.808 ft Net weight: 1,160 g approx. (2 cables)	
				SFB-CCB15	Length: 15 m 49.213 ft Net weight: 1,710 g approx. (2 cables)	
		Connector	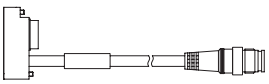	**SFB-CB05**	Length: 0.5 m 1.640 ft Net weight: 95 g approx. (2 cables)	Used for connecting to the light curtain and to an extension cable or the **SF-C11** control unit. Two cables per set for emitter and receiver Connector outer diameter: ø14 mm ø0.551 in max.
				SFB-CB5	Length: 5 m 16.404 ft Net weight: 620 g approx. (2 cables)	
				SFB-CB10	Length: 10 m 32.808 ft Net weight: 1,200 g approx. (2 cables)	
	4 Extension cable	With connector on one end	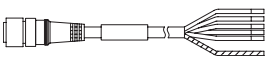	**SFB-CC3**	Length: 3 m 9.843 ft Net weight: 380 g approx. (2 cables)	Used for cable extension or connecting to the **SF-C13** control unit. Two cables per set for emitter and receiver Connector outer diameter: ø14 mm ø0.551 in max.
				SFB-CC10	Length: 10 m 32.808 ft Net weight: 1,200 g approx. (2 cables)	
		With connectors on both ends: For emitter	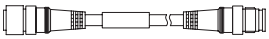	**SFB-CCJ3E**	Length: 3 m 9.843 ft Net weight: 190 g approx. (1 cables)	Used for cable extension or connecting to the **SF-C11** and the **SF-C14EX** control unit. One each for emitter and receiver Connector outer diameter: ø14 mm ø0.551 in max. Connector color: Gray (for emitter), Black (for receiver) Connector outer diameter: ø14 mm ø0.551 in max.
				SFB-CCJ10E	Length: 10 m 32.808 ft Net weight: 580 g approx. (1 cable)	
		With connectors on both ends: For receiver		**SFB-CCJ3D**	Length: 3 m 9.843 ft Net weight: 210 g approx. (1 cables)	
				SFB-CCJ10D	Length: 10 m 32.808 ft Net weight: 600 g approx. (1 cable)	
Muting control components (12-core cable, with interference prevention wire)	5 Bottom cap cable	Discrete wire	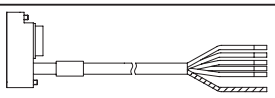	**SFB-CCB3-MU**	Length: 3 m 9.843 ft Net weight: 420 g approx. (2 cables)	Used for connecting to the light curtain and to other cables or the **SF-C13** control unit. Two cables per set for emitter and receiver
				SFB-CCB7-MU	Length: 7 m 22.966 ft Net weight: 930 g approx. (2 cables)	
		Connector	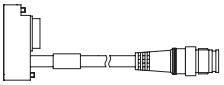	**SFB-CB05-MU**	Length: 0.5 m 1.640 ft Net weight: 110 g approx. (2 cables)	Used for connecting to the light curtain and to an extension cable or the **SF-C12** control unit. Two cables per set for emitter and receiver Connector outer diameter: ø16 mm ø0.630 in max.
	6 Extension cable	With connector on one end		**SFB-CC3-MU**	Length: 3 m 9.843 ft Net weight: 430 g approx. (2 cables)	Used for connecting to an extension cable or the **SF-C13** control unit. Two cables per set for emitter and receiver Connector outer diameter: ø16 mm ø0.630 in max.
				SFB-CC7-MU	Length: 7 m 22.966 ft Net weight: 1,000 g approx. (2 cables)	
				SFB-CC10-MU	Length: 10 m 32.808 ft Net weight: 1,300 g approx. (2 cables)	
		With connectors on both ends: For emitter	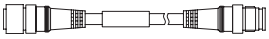	**SFB-CCJ3E-MU**	Length: 3 m 9.843 ft Net weight: 190 g approx. (1 cables)	Used for connecting to an extension cable or the **SF-C12** control unit. One each for emitter and receiver Connector color: Gray (for emitter), Black (for receiver) Connector outer diameter: ø16 mm ø0.630 in max.
				SFB-CCJ10E-MU	Length: 10 m 32.808 ft Net weight: 660 g approx. (1 cable)	
		With connectors on both ends: For receiver		**SFB-CCJ3D-MU**	Length: 3 m 9.843 ft Net weight: 210 g approx. (1 cables)	
				SFB-CCJ10D-MU	Length: 10 m 32.808 ft Net weight: 680 g approx. (1 cable)	
	7 Cable for series connection		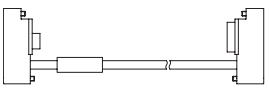	**SFB-CSL01**	Length: 0.1 m 0.328 ft Net weight: 45 g approx. (2 cables)	Used to connect light curtains in series Two cables per set for emitter and receiver (common for emitter and receiver) Cable color: Gray (common for emitter and receiver)
				SFB-CSL05	Length: 0.5 m 1.640 ft Net weight: 95 g approx. (2 cables)	
				SFB-CSL1	Length: 1 m 3.281 ft Net weight: 150 g approx. (2 cables)	
				SFB-CSL5	Length: 5 m 16.404 ft Net weight: 630 g approx. (2 cables)	
	3 Exclusive mating cable for **SF-C14EX**		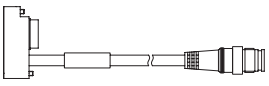	**SFB-CB05-EX**	Length: 0.5 m 1.640 ft Net weight: 95 g approx. (2 cables)	Used for connecting to the light curtain and to **SF-C14EX** control unit or 8-core extension cable with connectors on both ends Two cables per set for emitter and receiver Connector outer diameter: ø14 mm ø0.551 in max.
				SFB-CB5-EX	Length: 5 m 16.404 ft Net weight: 620 g approx. (2 cables)	
				SFB-CB10-EX	Length: 10 m 32.808 ft Net weight: 1,200 g approx. (2 cables)	
	3 Adapter cable	For **SF4-AH□** (PNP type)	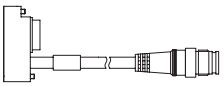	**SFB-CB05-A-P**	Length: 0.5 m 1.640 ft Net weight: 110 g approx. (2 cables)	8-core bottom cap cable specifications. Used to allow connector cables connected to previous light curtains (at the control circuit side) to be smoothly adapted to the **SF4B** series. Also, **SFB-CB05-A-P** and **SFB-CB05-A-N** are usable even when external device input is not used as the polarity of PNP output or NPN output is fixed. Two cables per set for emitter and receiver Connector outer diameter: ø14 mm ø0.551 in max.
		For **SF4-AH□-N** (NPN type)		**SFB-CB05-A-N**		
		For **SF2-EH□** (PNP type)		**SFB-CB05-B-P**		
		For **SF2-EH□-N** (NPN type)		**SFB-CB05-B-N**		

Note: Where the cable color has not been specified precisely, it is black for emitter, gray with black line for receiver, outer diameter is ø6 mm ø0.236 in, min. bending radius is R6 mm R0.236 in.

For details of mating cable of CC-Link Safety system remote I/O unit with connectors for light curtain **SF-CL1T264T**, refer to website.

ORDER GUIDE

Spare parts (Accessories for light curtain)

Designation	Model No.	Description
Intermediate supporting bracket (Note 1)	**MS-SFB-2**	Used to mount the light curtain on the intermediate position. (2 pcs. per set for emitter and receiver) Mounting is possible behind or at the side of the light curtain.
Intermediate supporting bracket (Note 2) (For **SF4B-□G**)	**MS-SF4BG-2**	Used to mount the light curtain in the intermediate position. (2 pcs. per set for emitter and receiver) Mounting is possible behind or at the side of the light curtain.
Test rod ø14	**SF4B-TR14**	Min. sensing object for regular checking (ø14 mm ø0.551 in), with finger protection type (min. sensing object ø14 mm ø0.551 in)
Test rod ø25	**SF4B-TR25**	Min. sensing object for regular checking (ø25 mm ø0.984 in), with hand protection type (min. sensing object ø25 mm ø0.984 in)

Notes: 1) The number of sets required varies depending on the product.
1 set: **SF4B-F□<V2>** ..... Light curtain with 79 to 111 beam channels
SF4B-H□<V2> ..... Light curtain with 40 to 56 beam channels
SF4B-A□<V2> ..... Light curtain with 20 to 28 beam channels
2 sets: **SF4B-F127□<V2>**
SF4B-H□<V2> ..... Light curtain with 64 to 80 beam channels
SF4B-A□<V2> ..... Light curtain with 32 to 40 beam channels
3 sets: **SF4B-H□<V2>** ..... Light curtain with 88 to 96 beam channels
SF4B-A□<V2> ..... Light curtain with 44 to 48 beam channels

2) The number of sets required varies depending on the product.
1 set: **SF4B-F□G<V2>** ..... Light curtain with 79 to 127 beam channels
SF4B-H□G<V2> ..... Light curtain with 40 to 64 beam channels
SF4B-A□G<V2> ..... Light curtain with 20 to 32 beam channels
2 set: **SF4B-H□G<V2>** ..... Light curtain with 72 to 96 beam channels
SF4B-A□G<V2> ..... Light curtain with 36 to 48 beam channels

Intermediate supporting bracket

- **MS-SFB-2**

<In case of rear mounting>

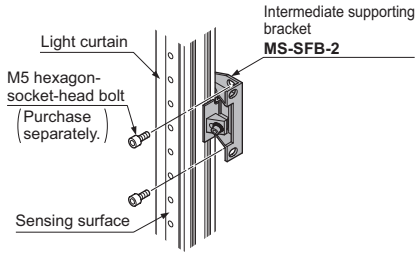

<In case of side mounting>

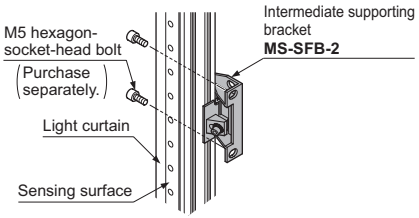

- **MS-SF4BG-2**

<In case of rear mounting>

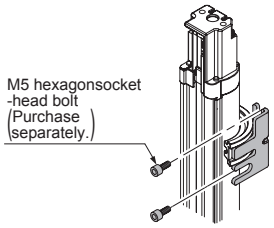

Material: SPCC

<In case of side mounting>

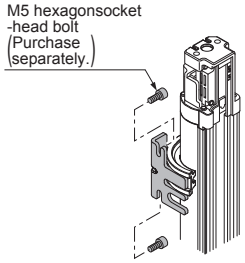

Material: SPCC

OPTIONS

Exclusive control units

Designation	Appearance	Model No.	Application cable	Description
Connector connection type control unit	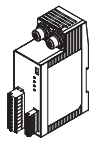	**SF-C11**	Bottom cap cable: **SFB-CB□** Extension cable: **SFB-CCJ10□**	Use 8-core cable with connector to connect to the light curtain. Compatible with up to Control Category 4. Interference prevention wires and muting function cannot be used.
Robust type control unit	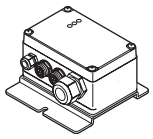	**SF-C12**	Bottom cap cable: **SFB-CB05-MU** Extension cable: **SFB-CCJ10□-MU**	Use 12-core cable with connector to connect to the light curtain. Interference prevention wires can be used. Compatible with up to Control Category 4. Muting function cannot be used.
Slim type control unit	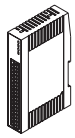	**SF-C13**	Bottom cap cable: **SFB-CCB□(-MU)** Extension cable: **SFB-CC□(-MU)**	Use a discrete wire cable to connect to the light curtain. Muting function and interference prevention wires can be used. Compatible with up to Control Category 4.
Application expansion unit for **SF4B** series	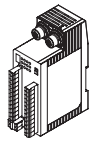	**SF-C14EX**	Bottom cap cable: **SFB-CB□-EX** Extension cable: **SFB-CCJ10□**	The muting control function and emergency stop input expand the applications of the light curtains. Use exclusive cable to connect to the light curtain. Compatible with up to Control Category 4. The handy-controller **SFB-HC** cannot be used with **SF-C14EX-01**.
Handy-controller non-compatible type		**SF-C14EX-01**		
CC-Link Safety system remote I/O unit for light curtain (Note)	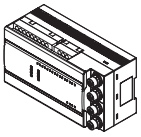	**SF-CL1T264T**	Bottom cap cable: **SFB-CB□-CL** Extension cable: **SFB-CCJ10□-CL**	This is a remote I/O unit that allows the safety field network "CC-Link Safety" to be connected to the light curtains or the safety components. Use exclusive cable to connect to the light curtain. Compatible with up to Control Category 4. Please contact our office for details.

Note: Refer to the our website for details of the remote I/O unit **SF-CL1T264T**.

SF-C12 spare relay set

A set of spare relays (2 safety relays and 1 removal tool) is available for the safety relay that is built into the **SF-C12**.
Model No.: **SF-C12-RY**

●Recommended safety relay

Safety relay
Panasonic Corporation
SF series

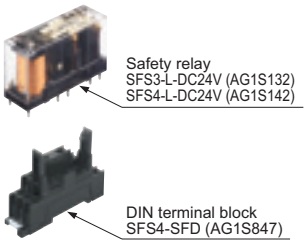

Note: Contact Panasonic Corporation for details on the recommended products.

Item \ Type / Model No.	With LED indicator	
	SFS3-L-DC24V	SFS4-L-DC24V
Contact arrangement	3a1b	4a2b
Rated nominal switching capacity	6 A / 250 V AC, 6 A / 30 V DC	
Min. switching capacity	1 mA / 5 V DC	
Coil rating	15 mA / 24 V DC	20.8 mA / 24 V DC
Rated power consumption	360 mW	500 mW
Operation time	20 ms or less	
Release time	20 ms or less	
Ambient temperature	-40 to +85 °C -40 to +185 °F (Humidity: 5 to 85 % RH)	
Applicable standards	UL, C-UL, TÜV	

OPTIONS

Handy-controller

Designation	Appearance	Model No.
Handy-controller	* Includes 2 adapter cables	**SFB-HC**
Cable set for cable type connection	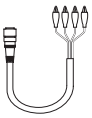	**SFC-WNC1**

Note: A handy-controller cannot be used with the **SF4B-□-01<V2>**, the **SF4B-□-03<V2>** and the **SF-C14EX-01**.

Pigtailed type

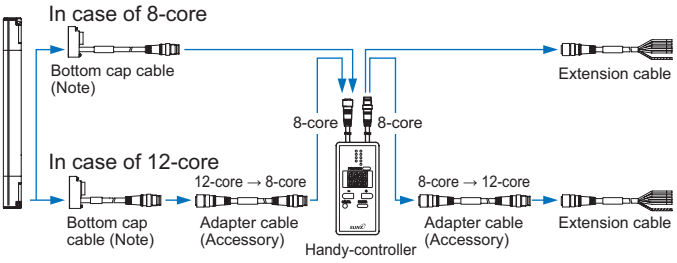

Note: If using a bottom cap cable with discrete wire, please order the **SFB-CC3/CC10** separately. Refer to the instruction manual for the light curtain for details on wiring.

Cable type

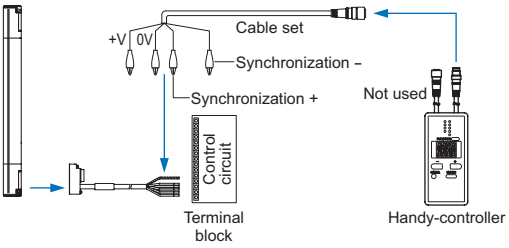

Light curtain diagnosis software

Simply input the error number of the light curtain on the screen, and the section of maintenance needed will be located and coping process will be displayed.

* Free download aviable from our website.

Light curtain diagnosis software

Y-shaped connector

Type	Appearance	Model No.	Description	
Wire-saving Y-shaped connector		**SFB-WY1**	Wire-saving connector for standard components (8-core cable). Cables of emitter and receiver are consolidated into one cable for wire-saving. Wiring has +24 V, 0 V, OSSD 1, OSSD 2, output polarity setting wire (shield). [Power wire and synchronization wire are connected inside the connector. Interlock is disabled (automatic reset).]	
Cable with connector on one side	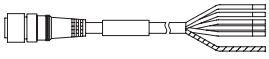	**WY1-CCN3**	Cable length: 3 m 9.843 ft Net weight: 200 g approx. (1 cable)	Mating cable for Y-shaped connector Cable color: Gray (with black line) Connector color: Black The min. bending radius: R6 mm R0.236 in
		WY1-CCN10	Cable length: 10 m 32.808 ft Net weight: 620 g approx. (1 cable)	

By using the Y-shaped connector, the least required wires such as power or safety output are consolidated into one cable. Man-hours taken for wiring is eliminated to the minimum. Construction times as well as wiring mistakes are greatly reduced.

Previous A total of 16 wires

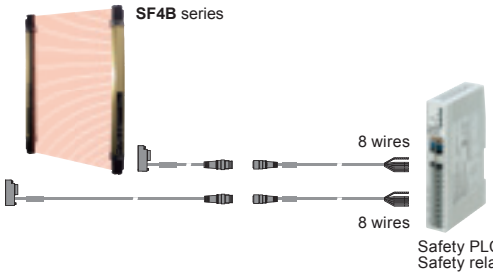

Y-shaped connector Only 5 wires
Less wiring mistakes! Reduced wiring time!
Easy wiring to Safety PLC, etc.

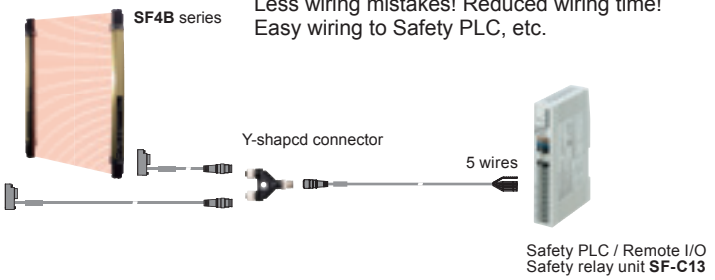

OPTIONS

Product configuration

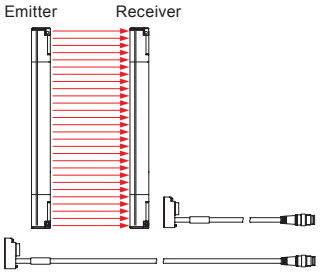

Extension cable (1 cable for receiver)
SFB-CCJ3D (3 m 9.843 ft)
SFB-CCJ10D (10 m 32.808 ft)

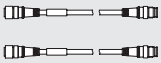

Extension cable (1 cable for emitter)
SFB-CCJ3E (3 m 9.843 ft)
SFB-CCJ10E (10 m 32.808 ft)

Bottom cap cable (2 cables for emitter and receiver)
SFB-CB05 (0.5 m 1.64 ft)
SFB-CB5 (5 m 16.404 ft)
SFB-CB10 (10 m 32.808 ft)

Y-shaped connector
SFB-WY1

Extension cable

SFB-CCJ3D (3 m 9.843 ft)
SFB-CCJ10D (10 m 32.808 ft)

Cable with connector on one side (Common for all models)

WY1-CCN3 (3 m 9.843 ft)
WY1-CCN10 (10 m 32.808 ft)

Connector pin layout

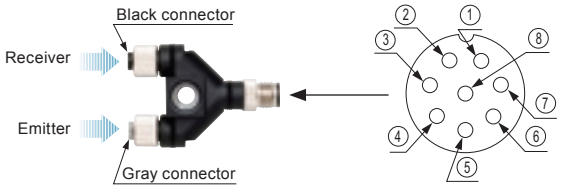

Connector pin No.	Description
①	OSSD 2
②	+24 V
③	OSSD 1
④	Not used
⑤	Not used
⑥	Not used
⑦	0 V
⑧	Output polarity setting wire (Shield)

Wiring diagram of control unit SF-C13

<For PNP output (minus ground)>

- Connect the light curtain control outputs OSSD 1 and OSSD 2 to S1 and S2 respectively.

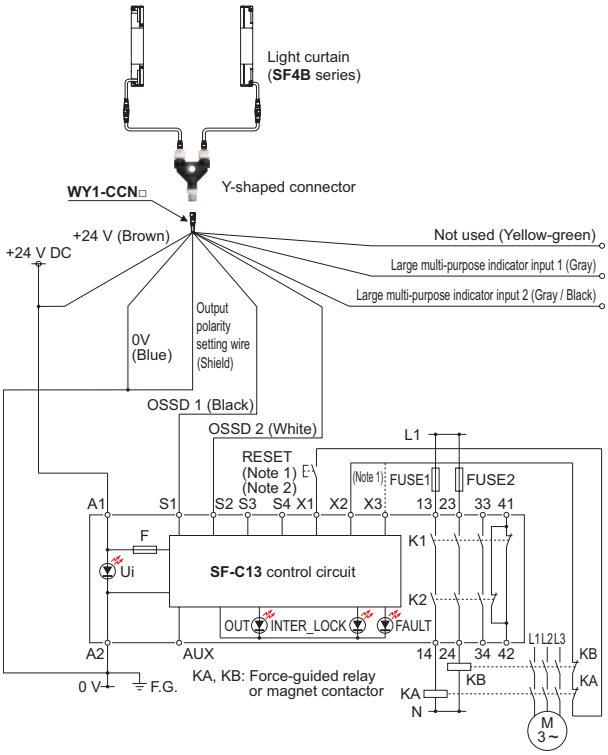

Notes: 1) The above diagram is when using manual reset. If automatic reset is used, disconnect the lead from X2 and connect it to X3. In this case, a reset (RESET) button is not needed.
2) Use a momentary-type switch as the reset (RESET) button.
3) Unused wires must be insulated.

<For NPN output (plus ground)>

- Connect the light curtain control outputs OSSD 1 and OSSD 2 to S4 and S2 respectively and ground the + side.

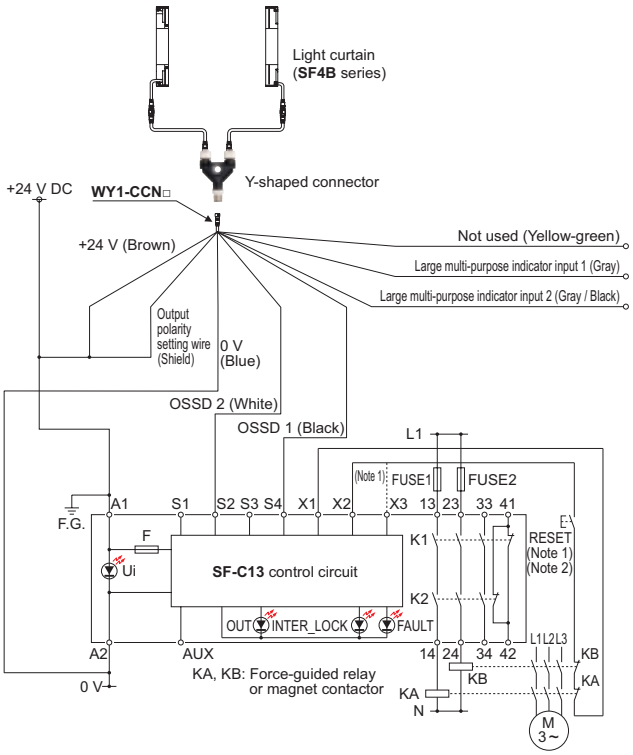

Notes: 1) The above diagram is when using manual reset. If automatic reset is used, disconnect the lead from X2 and connect it to X3. In this case, a reset (RESET) button is not needed.
2) Use a momentary-type switch as the reset (RESET) button.
3) Unused wires must be insulated.

OPTIONS

Front protection cover (Except for SF4B-□G) / Protection bar set (Except for SF4B-□G) / Corner mirror

Applicable beam channels			Front protection cover	Protection bar set	Rear / side protection bar set	Corner mirror	
Finger	Hand	Arm / Foot	Model No.	Model No.	Model No.	Model No.	Effective reflective surface
23	12	6	**FC-SFBH-12**	**MC-SFBH-12**	**MC-SFBH-12-T**	**RF-SFBH-12**	236 × 72 mm 9.291 × 2.835 in
31	16	8	**FC-SFBH-16**	**MC-SFBH-16**	**MC-SFBH-16-T**	**RF-SFBH-16**	316 × 72 mm 12.441 × 2.835 in
39	20	10	**FC-SFBH-20**	**MC-SFBH-20**	**MC-SFBH-20-T**	**RF-SFBH-20**	396 × 72 mm 15.591 × 2.835 in
47	24	12	**FC-SFBH-24**	**MC-SFBH-24**	**MC-SFBH-24-T**	**RF-SFBH-24**	476 × 72 mm 18.740 × 2.835 in
55	28	14	**FC-SFBH-28**	**MC-SFBH-28**	**MC-SFBH-28-T**	**RF-SFBH-28**	556 × 72 mm 21.890 × 2.835 in
63	32	16	**FC-SFBH-32**	**MC-SFBH-32**	**MC-SFBH-32-T**	**RF-SFBH-32**	636 × 72 mm 25.039 × 2.835 in
71	36	18	**FC-SFBH-36**	**MC-SFBH-36**	**MC-SFBH-36-T**	**RF-SFBH-36**	716 × 72 mm 28.189 × 2.835 in
79	40	20	**FC-SFBH-40**	**MC-SFBH-40**	**MC-SFBH-40-T**	**RF-SFBH-40**	796 × 72 mm 31.339 × 2.835 in
95	48	24	**FC-SFBH-48**	**MC-SFBH-48**	**MC-SFBH-48-T**	**RF-SFBH-48**	956 × 72 mm 37.638 × 2.835 in
111	56	28	**FC-SFBH-56**	**MC-SFBH-56**	**MC-SFBH-56-T**	**RF-SFBH-56**	1,116 × 72 mm 43.937 × 2.835 in
127	64	32	**FC-SFBH-64**	**MC-SFBH-64**	**MC-SFBH-64-T**	**RF-SFBH-64**	1,276 × 72 mm 50.236 × 2.835 in
–	72	36	**FC-SFBH-72**	**MC-SFBH-72**	**MC-SFBH-72-T**	**RF-SFBH-72**	1,436 × 72 mm 56.535 × 2.835 in
–	80	40	**FC-SFBH-80**	**MC-SFBH-80**	**MC-SFBH-80-T**	**RF-SFBH-80**	1,596 × 72 mm 62.835 × 2.835 in
–	88	44	**FC-SFBH-88**	**MC-SFBH-88**	**MC-SFBH-88-T**	**RF-SFBH-88**	1,756 × 72 mm 69.134 × 2.835 in
–	96	48	**FC-SFBH-96**	**MC-SFBH-96**	**MC-SFBH-96-T**	**RF-SFBH-96**	1,916 × 72 mm 75.433 × 2.835 in

Note: The model Nos. given above denote a single unit, not a pair of units. 2 units are required for use in mounting to the emitter / receiver. (Except for corner mirror)

Front protection cover

• **FC-SFBH-□**

Protects sensing surface of the light curtain from flying objects such as welding spatter.
The operating range reduces when the front protection cover is used.

Note: It is not available for **SF4B-□G**.

Material: Polycarbonate

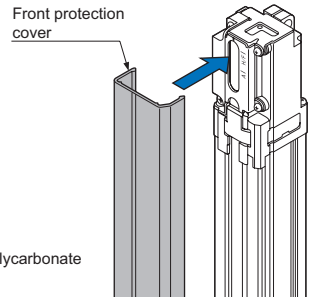

Sensing range

	SF4B-F□	SF4B-H□		SF4B-A□	
		12 to 64 beam channels type	72 to 96 beam channels type	6 to 32 beam channels type	36 to 48 beam channels type
Only emitter installed	0.3 to 6 m 0.984 to 19.685 ft	0.3 to 7.5 m 0.984 to 24.606 ft	0.3 to 6 m 0.984 to 19.685 ft	0.3 to 7.5 m 0.984 to 24.606 ft	0.3 to 6 m 0.984 to 19.685 ft
Only receiver installed	0.3 to 6 m 0.984 to 19.685 ft	0.3 to 7.5 m 0.984 to 24.606 ft	0.3 to 6 m 0.984 to 19.685 ft	0.3 to 7.5 m 0.984 to 24.606 ft	0.3 to 6 m 0.984 to 19.685 ft
Both emitter and receiver installed	0.3 to 5.5 m 0.984 to 18.045 ft	0.3 to 7 m 0.984 to 22.966 ft	0.3 to 5.5 m 0.984 to 18.045 ft	0.3 to 7 m 0.984 to 22.966 ft	0.3 to 5.5 m 0.984 to 18.045 ft

Note: The operating range is the possible setting distance between the emitter and the receiver.

Corner mirror

• **RF-SFBH-□**

Normally for L-shaped or U-shaped installation, 2 or 3 sets of light curtains are needed. With the use of a corner mirror reflecting the light, one set of light curtain is possible for L-shaped or U-shaped installation.

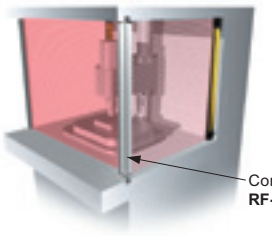

Percent decline of the sensing range

With 1 mirror	Declined to 90 %
With 2 mirrors	Declined to 80 %

Protection bar set

• **MC-SFBH-□**

* It is not available for **SF4B-□G**.

Rear / side protection bar set

• **MC-SFBH-□-T**

* It is not available for **SF4B-□G**.

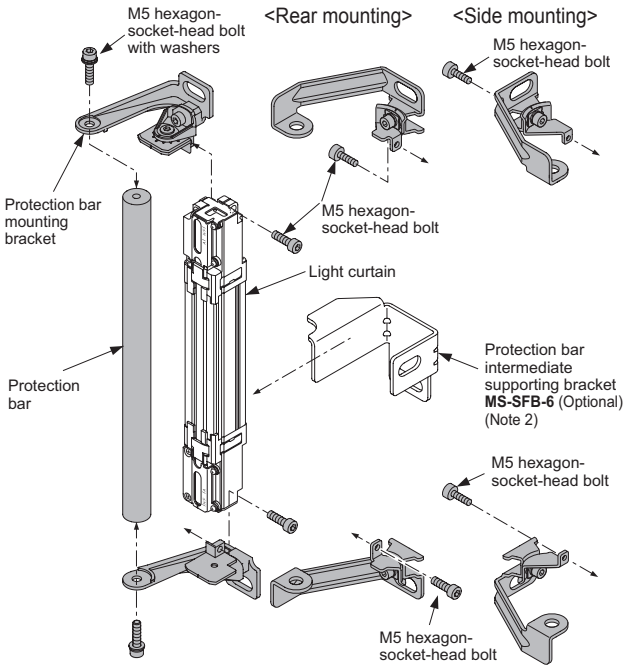

• Parts List

Designation	MC-SFBH-□		MC-SFBH-□-T	
	Number	Remarks	Number	Remarks
Protection bar	1 pc.	Material: Aluminum	1 pc.	Material: Aluminum
Protection bar mounting bracket (For left side, for right side)	1 pc. each	Material: Die-cast zinc alloy	1 pc. each (Note 1)	Material: Iron (Trivalent chrome plated)
Hexagon-socket-head bolt with washers	2 pcs.	M5 (length: 20 mm 0.787 in)	2 pcs.	M5 (length: 20 mm 0.787 in)
Hexagon-socket-head bolt	2 pcs.	M5 (length: 16 mm 0.630 in)	2 pcs.	M5 (length: 18 mm 0.709 in)
Protection bar intermediate supporting bracket **MS-SFB-6** (Optional) (Note 2)	1 pc.	Material: Iron (Trivalent chrome plated)	1 pc.	Material: Iron (Trivalent chrome plated)

Notes: 1) Available as a spare part. Model No.: **MS-MCSFB-1-T**
2) The protection bar intermediate supporting bracket **MS-SFB-6** (optional) is installed to protection bars that are longer than the **MC-SFBH-48(-T)**. Use if there is much flexure bending in the protection bar. Please contact our office for details.

OPTIONS

Front protection cover (For SF4B-□G)

Applicable beam channels / Designation			Front protection cover
Finger	Hand	Arm / Foot	Model No.
23	12	6	**FC-SF4BG-H12**
31	16	8	**FC-SF4BG-H16**
39	20	10	**FC-SF4BG-H20**
47	24	12	**FC-SF4BG-H24**
55	28	14	**FC-SF4BG-H28**
63	32	16	**FC-SF4BG-H32**
71	36	18	**FC-SF4BG-H36**
79	40	20	**FC-SF4BG-H40**
95	48	24	**FC-SF4BG-H48**
111	56	28	**FC-SF4BG-H56**
127	64	32	**FC-SF4BG-H64**
–	72	36	**FC-SF4BG-H72**
–	80	40	**FC-SF4BG-H80**
–	88	44	**FC-SF4BG-H88**
–	96	48	**FC-SF4BG-H96**

Note: The model Nos. given above denote a single unit, not a pair of units. 2 units are required for use in mounting to the emitter / receiver.

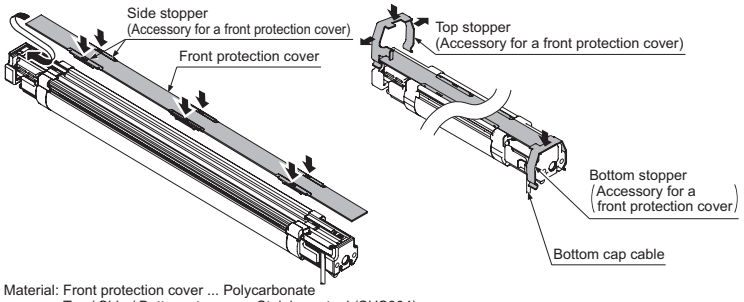

Material: Front protection cover ... Polycarbonate
Top / Side / Bottom stopper ... Stainless steel (SUS304)

Sensing range

	SF4B-F□G<V2>	SF4B-H□G<V2>		SF4B-A□G<V2>	
		12 to 64 beam channels type	72 to 96 beam channels type	6 to 32 beam channels type	36 to 48 beam channels type
Only emitter installed	0.3 to 6 m 0.984 to 19.685 ft	0.3 to 7.5 m 0.984 to 24.606 ft	0.3 to 6 m 0.984 to 19.685 ft	0.3 to 7.5 m 0.984 to 24.606 ft	0.3 to 6 m 0.984 to 19.685 ft
Only receiver installed					
Both emitter and receiver installed	0.3 to 5.5 m 0.984 to 18.045 ft	0.3 to 7 m 0.984 to 22.966 ft	0.3 to 5.5 m 0.984 to 18.045 ft	0.3 to 7 m 0.984 to 22.966 ft	0.3 to 5.5 m 0.984 to 18.045 ft

Note: The operating range is the possible setting distance between the emitter and the receiver.

Designation	Model No.	Description
Test rod ø45	**SF4B-TR45**	Min. sensing object for regular checking (ø45 mm ø1.772 in), with arm / foot protection type (min. sensing object ø45 mm ø1.772 in)
Laser alignment tool	**SF-LAT-2N**	Allows easy beam axis alignment using easy-to-see laser beam
Laser alignment tool (For **SF4B-□G**)	**SF-LAT-4BG**	Allows easy beam axis alignment using easy-to-see laser beam
Caution tape	**SF-TP-BG10**	Attached to the side of the light curtain to alert workers to hazards (10 m 32.8 ft long)

Laser alignment tool

• **SF-LAT-2N**

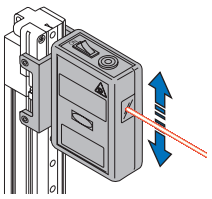

Laser alignment tool (For SF4B-□G)

• **SF-LAT-4BG**

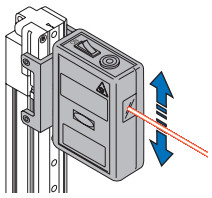

* Illustration shows standard type light curtain.

Caution tape

• **SF-TP-BG10**

OPTIONS

Designation	Model No.	Description
Large display unit for light curtain	**SF-IND-2**	With the auxiliary output of the light curtain, the operation is easily observable from various directions. **Specifications** • Supply voltage: 24 V DC ±15 % • Current consumption: 12 mA or less • Indicators: Orange LED (8 pcs. used) [Light up when external contact is ON] • Ambient temperature: –10 to +55 °C +14 to +131 °F (No dew condensation or icing allowed) • Material: POM (Enclosure) Polycarbonate (Cover) Cold rolled carbon steel (SPCC) (Bracket) • Cable: 0.3 mm² 2-core cabtyre cable, 3 m 9.843 ft long • Weight: 70 g approx. (including bracket) **I/O circuit diagrams** **<With NPN output type>** 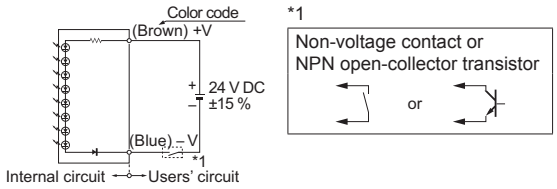 **<With PNP output type>** 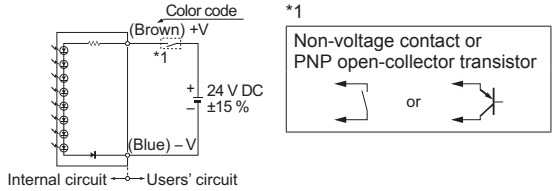

Large display unit for light curtain

• **SF-IND-2**

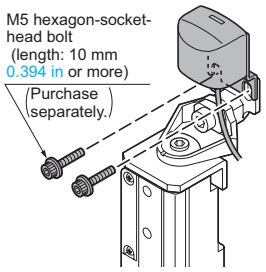

Attaches to top of light curtain.
Tighten together the mounting bracket provided with the light curtain **MS-SFB-1/4**, **MS-SFBG-1** and the attached mounting bracket of **SF-IND-2**.

Introduction to sensors that can be used as muting sensors

Compact Photoelectric Sencer
CX-400 Ver.2 SERIES

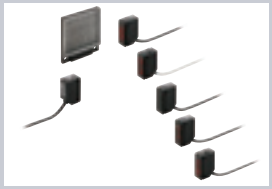

• World standard size
• Wide variation

Ultra-slim Photoelectric Sensor
EX-10 Ver.2 SERIES

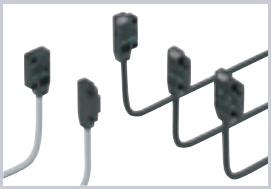

• 3.5 mm 0.138 in thickness
• Long sensing range:1 m 3.281 ft (thru-beam type:**EX-19**)
*The **EX-20** series that is compatible with M3 mounting screws is also available.

U-shaped Micro Photoelectric Sensor
PM-64 SERIES

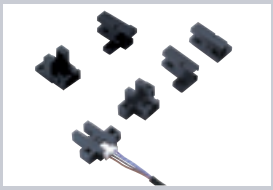

• Extremely compact and space saving
• A lineup of quick fitting-up connector type

Rectangular-shaped Inductive Proximity Sensor
GX-F/H SERIES

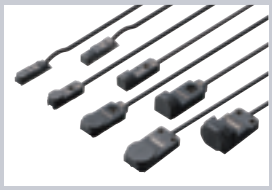

• Industry longest in stable sensing range
• 10 times the durability (Compared to previous models)
• IP68g protective construction

* Check the specifications for the muting sensors before making a selection. Refer to "**PRECAUTIONS FOR USE**" (p.35~) for details on specifications and installation conditions.

Recommended muting lamps

Manufactured by Maruyasu Dengyo Co.,Ltd.
Model No.: BLR-30O-C
Manufactured by IDEC Corporation
Model No.: HW1P-5Q7A
Note: Contact the manufacturers for details on the recommended products.

Recommended safety relays

Manufactured by Panasonic Corporation
Model No.: SF series (Safety Relay)
Note: Contact the manufacturers for details on the recommended products.

SPECIFICATIONS

Light curtain individual specifications

SF4B-F□(G)<V2>

Item \ Type	Min. sensing object ø14 mm ø0.551 in type (10 mm 0.394 in beam pitch)									
Model No. (Note 2)	SF4B-F23□<V2>	SF4B-F23□G<V2>	SF4B-F31□<V2>	SF4B-F31□G<V2>	SF4B-F39□<V2>	SF4B-F39□G<V2>	SF4B-F47□<V2>	SF4B-F47□G<V2>	SF4B-F55□<V2>	SF4B-F55□G<V2>
No. of beam channels	23		31		39		47		55	
Protective height	230 mm 9.055 in	244 mm 9.606 in	310 mm 12.205 in	324 mm 12.756 in	390 mm 15.354 in	404 mm 15.906 in	470 mm 18.504 in	484 mm 19.055 in	550 mm 21.654 in	564 mm 22.205 in
Current consumption	Emitter: 80 mA or less, Receiver: 120 mA or less						Emitter: 100 mA or less, Receiver: 160 mA or less			
PFHd	2.56×10^{-9}		2.96×10^{-9}		3.36×10^{-9}		3.75×10^{-9}		4.15×10^{-9}	
MTTFd	100 years or more									
Net weight (Total of emitter and receiver)	510 g approx.	980 g approx.	660 g approx.	1,340 g approx.	810 g approx.	1,700 g approx.	960 g approx.	2,000 g approx.	1,100 g approx.	2,400 g approx.

Item \ Type	Min. sensing object ø14 mm ø0.551 in type (10 mm 0.394 in beam pitch)							
Model No. (Note 2)	SF4B-F63□<V2>	SF4B-F63□G<V2>	SF4B-F71□<V2>	SF4B-F71□G<V2>	SF4B-F79□<V2>	SF4B-F79□G<V2>	SF4B-F95□<V2>)	SF4B-F95□G<V2>
No. of beam channels	63		71		79		95	
Protective height	630 mm 24.803 in	644 mm 25.354 in	710 mm 27.953 in	724 mm 28.504 in	790 mm 31.102 in	804 mm 31.654 in	950 mm 37.402 in	964 mm 37.953 in
Current consumption	Emitter: 100 mA or less, Receiver: 160 mA or less				Emitter: 115 mA or less, Receiver: 190 mA or less			
PFHd	4.55×10^{-9}		4.95×10^{-9}		5.35×10^{-9}		6.15×10^{-9}	
MTTFd	100 years or more							
Net weight (Total of emitter and receiver)	1,260 g approx.	2,800 g approx.	1,420 g approx.	3,200 g approx.	1,570 g approx.	3,400 g approx.	1,870 g approx.	4,200 g approx.

Item \ Type	Min. sensing object ø14 mm ø0.551 in type (10 mm 0.394 in beam pitch)			
Model No. (Note 2)	SF4B-F111□<V2>	SF4B-F111□G<V2>	SF4B-F127□<V2>	SF4B-F127□G<V2>
No. of beam channels	111		127	
Protective height	1,110 mm 43.701 in	1,124 mm 44.252 in	1,270 mm 50.000 in	1,284 mm 50.551 in
Current consumption	Emitter: 135 mA or less, Receiver: 230 mA or less			
PFHd	6.94×10^{-9}		7.74×10^{-9}	
MTTFd	100 years or more			
Net weight (Total of emitter and receiver)	2,170 g approx.	5,000 g approx.	2,470 g approx.	5,600 g approx.

Notes: 1) Where measurement conditions have not been specified precisely, the conditions used were an ambient temperature of +20 °C +68 °F. The model No. with "**G**" is a robust type.
2) The models with the "**-01**" or "**-03**" cannot be used with the handy-controller **SFB-HC**.

SF4B-H□(G)<V2>

Item \ Type	Min. sensing object ø25 mm ø0.984 in type (20 mm 0.787 in beam pitch)									
Model No. (Note 2)	SF4B-H12□<V2>	SF4B-H12□G<V2>	SF4B-H16□<V2>	SF4B-H16□G<V2>	SF4B-H20□<V2>	SF4B-H20□G<V2>	SF4B-H24□<V2>	SF4B-H24□G<V2>	SF4B-H28□<V2>	SF4B-H28□G<V2>
No. of beam channels	12		16		20		24		28	
Protective height	230 mm 9.055 in	244 mm 9.606 in	310 mm 12.205 in	324 mm 12.756 in	390 mm 15.354 in	404 mm 15.906 in	470 mm 18.504 in	484 mm 19.055 in	550 mm 21.654 in	564 mm 22.205 in
Current consumption	Emitter: 70 mA or less, Receiver: 95 mA or less						Emitter: 80 mA or less, Receiver: 115 mA or less			
PFHd	2.01×10^{-9}		2.21×10^{-9}		2.41×10^{-9}		2.61×10^{-9}		2.81×10^{-9}	
MTTFd	100 years or more									
Net weight (Total of emitter and receiver)	510 g approx.	980 g approx.	660 g approx.	1,340 g approx.	810 g approx.	1,700 g approx.	960 g approx.	2,000 g approx.	1,100 g approx.	2,400 g approx.

Item \ Type	Min. sensing object ø25 mm ø0.984 in type (20 mm 0.787 in beam pitch)									
Model No. (Note 2)	SF4B-H32□<V2>	SF4B-H32□G<V2>	SF4B-H36□<V2>	SF4B-H36□G<V2>	SF4B-H40□<V2>	SF4B-H40□G<V2>	SF4B-H48□<V2>	SF4B-H48□G<V2>	SF4B-H56□<V2>	SF4B-H56□G<V2>
No. of beam channels	32		36		40		48		56	
Protective height	630 mm 24.803 in	644 mm 25.354 in	710 mm 27.953 in	724 mm 28.504 in	790 mm 31.102 in	804 mm 31.654 in	950 mm 37.402 in	964 mm 37.953 in	1,110 mm 43.701 in	1,124 mm 44.252 in
Current consumption	Emitter: 80 mA or less, Receiver: 115 mA or less				Emitter: 90 mA or less, Receiver: 140 mA or less				Emitter: 100 mA or less, Receiver: 160 mA or less	
PFHd	3.01×10^{-9}		3.21×10^{-9}		3.41×10^{-9}		3.80×10^{-9}		4.20×10^{-9}	
MTTFd	100 years or more									
Net weight (Total of emitter and receiver)	1,260 g approx.	2,800 g approx.	1,420 g approx.	3,200 g approx.	1,570 g approx.	3,400 g approx.	1,870 g approx.	4,200 g approx.	2,170 g approx.	5,000 g approx.

SPECIFICATIONS

Item \ Type / Model No. (Note 2)	Min. sensing object ø25 mm ø0.984 in type (20 mm 0.787 in beam pitch)									
	SF4B-H64□<V2>	SF4B-H64□G<V2>	SF4B-H72□<V2>	SF4B-H72□G<V2>	SF4B-H80□<V2>	SF4B-H80□G<V2>	SF4B-H88□<V2>	SF4B-H88□G<V2>	SF4B-H96□<V2>	SF4B-H96□G<V2>
No. of beam channels	64		72		80		88		96	
Protective height	1,270 mm 50.000 in	1,284 mm 50.551 in	1,430 mm 56.299 in	1,444 mm 56.850 in	1,590 mm 62.598 in	1,604 mm 63.150 in	1,750 mm 68.898 in	1,764 mm 69.449 in	1,910 mm 75.197 in	1,924 mm 75.748 in
Current consumption	Emitter: 100 mA or less, Receiver: 160 mA or less		Emitter: 110 mA or less, Receiver: 180 mA or less				Emitter: 120 mA or less, Receiver: 200 mA or less			
PFHd	4.60×10^{-9}		5.00×10^{-9}		5.40×10^{-9}		5.80×10^{-9}		6.20×10^{-9}	
MTTFd	100 years or more									
Net weight (Total of emitter and receiver)	2,470 g approx.	5,600 g approx.	2,770 g approx.	6,400 g approx.	3,070 g approx.	7,000 g approx.	3,370 g approx.	7,800 g approx.	3,670 g approx.	8,400 g approx.

Notes: 1) Where measurement conditions have not been specified precisely, the conditions used were an ambient temperature of +20 °C +68 °F. The model No. with "**G**" is a robust type.
2) The models with the "**-01**" or "**-03**" cannot be used with the handy-controller **SFB-HC**.

SF4B-A□(G)<V2>

Item \ Type / Model No. (Note 2)	Min. sensing object ø45 mm ø1.772 in type (40 mm 1.575 in beam pitch)									
	SF4B-A6□<V2>	SF4B-A6□G<V2>	SF4B-A8□<V2>	SF4B-A8□G<V2>	SF4B-A10□<V2>	SF4B-A10□G<V2>	SF4B-A12□<V2>	SF4B-A12□G<V2>	SF4B-A14□<V2>	SF4B-A14□G<V2>
No. of beam channels	6		8		10		12		14	
Protective height	230 mm 9.055 in	244 mm 9.606 in	310 mm 12.205 in	324 mm 12.756 in	390 mm 15.354 in	404 mm 15.906 in	470 mm 18.504 in	484 mm 19.055 in	550 mm 21.654 in	564 mm 22.205 in
Current consumption	Emitter: 65 mA or less, Receiver: 85 mA or less						Emitter: 70 mA or less, Receiver: 95 mA or less			
PFHd	1.71×10^{-9}		1.81×10^{-9}		1.91×10^{-9}		2.01×10^{-9}		2.11×10^{-9}	
MTTFd	100 years or more									
Net weight (Total of emitter and receiver)	510 g approx.	980 g approx.	660 g approx.	1,340 g approx.	810 g approx.	1,700 g approx.	960 g approx.	2,000 g approx.	1,100 g approx.	2,400 g approx.

Item \ Type / Model No. (Note 2)	Min. sensing object ø45 mm ø1.772 in type (40 mm 1.575 in beam pitch)									
	SF4B-A16□<V2>	SF4B-A16□G<V2>	SF4B-A18□<V2>	SF4B-A18□G<V2>	SF4B-A20□<V2>	SF4B-A20□G<V2>	SF4B-A24□<V2>	SF4B-A24□G<V2>	SF4B-A28□<V2>	SF4B-A28□G<V2>
No. of beam channels	16		18		20		24		28	
Protective height	630 mm 24.803 in	644 mm 25.354 in	710 mm 27.953 in	724 mm 28.504 in	790 mm 31.102 in	804 mm 31.654 in	950 mm 37.402 in	964 mm 37.953 in	1,110 mm 43.701 in	1,124 mm 44.252 in
Current consumption	Emitter: 70 mA or less, Receiver: 95 mA or less				Emitter: 75 mA or less, Receiver: 105 mA or less				Emitter: 80 mA or less, Receiver: 120 mA or less	
PFHd	2.21×10^{-9}		2.31×10^{-9}		2.41×10^{-9}		2.61×10^{-9}		2.81×10^{-9}	
MTTFd	100 years or more									
Net weight (Total of emitter and receiver)	1,260 g approx.	2,800 g approx.	1,420 g approx.	3,200 g approx.	1,570 g approx.	3,400 g approx.	1,870 g approx.	4,200 g approx.	2,170 g approx.	5,000 g approx.

Item \ Type / Model No. (Note 2)	Min. sensing object ø45 mm ø1.772 in type (40 mm 1.575 in beam pitch)									
	SF4B-A32□<V2>	SF4B-A32□G<V2>	SF4B-A36□<V2>	SF4B-A36□G<V2>	SF4B-A40□<V2>	SF4B-A40□G<V2>	SF4B-A44□<V2>	SF4B-A44□G<V2>	SF4B-A48□<V2>	SF4B-A48□G<V2>
No. of beam channels	32		36		40		44		48	
Protective height	1,270 mm 50.000 in	1,284 mm 50.551 in	1,430 mm 56.299 in	1,444 mm 56.850 in	1,590 mm 62.598 in	1,604 mm 63.150 in	1,750 mm 68.898 in	1,764 mm 69.449 in	1,910 mm 75.197 in	1,924 mm 75.748 in
Current consumption	Emitter: 80 mA or less, Receiver: 120 mA or less		Emitter: 85 mA or less, Receiver: 130 mA or less				Emitter: 95 mA or less, Receiver: 140 mA or less			
PFHd	3.01×10^{-9}		3.21×10^{-9}		3.41×10^{-9}		3.61×10^{-9}		3.80×10^{-9}	
MTTFd	100 years or more									
Net weight (Total of emitter and receiver)	2,470 g approx.	5,600 g approx.	2,770 g approx.	6,400 g approx.	3,070 g approx.	7,000 g approx.	3,370 g approx.	7,800 g approx.	3,670 g approx.	8,400 g approx.

Notes: 1) Where measurement conditions have not been specified precisely, the conditions used were an ambient temperature of +20 °C +68 °F. The model No. with "**G**" is a robust type.
2) The models with the "**-01**" or "**-03**" cannot be used with the handy-controller **SFB-HC**.

SPECIFICATIONS

Light curtain common specifications

Item		Type	Min. sensing object ø14 mm ø0.551 in type	Min. sensing object ø25 mm ø0.984 in type	Min. sensing object ø45 mm ø1.772 in type
		Model No.	**SF4B-F□(G)<V2>**	**SF4B-H□(G)<V2>**	**SF4B-A□(G)<V2>**
	SFB-HC non-compatible		**SF4B-F□-01<V2>**	**SF4B-H□-01<V2>**	**SF4B-A□-01<V2>**
	Korean press compliant (Note 3)		**SF4B-F□-03<V2>**	**SF4B-H□-03<V2>**	———
Applicable standards (Note 2)	International standard		IEC 61496-1/2 (Type 4), ISO 13849-1 (Category 4, PLe), IEC 61508-1 to 7 (SIL3)		
	Japan		JIS B 9704-1/2 (Type 4), JIS B 9705-1 (Category 4), JIS C 0508-1 to 7 (SIL3)		
	Europe (EU)		EN 61496-1 (Type 4), EN ISO 13849-1 (Category 4, PLe), EN 61508-1 to 7 (SIL3), EN 55011, EN 50178, EN 61000-6-2		
	North America		ANSI/UL 61496-1/2 (Type 4), ANSI/UL 508, UL 1998 (Class 2), CAN/CSA 61496-1/2 (Type 4), CAN/CSA C22.2 No.14, OSHA 1910.212, OSHA 1910.217(C), ANSI B11.1 to B11.19, ANSI/RIA 15.06		
	South Korea (S-Mark)		S1-G-35-2005, S2-W-11-2003 (**SF4B-□<V2>** only)		
	China (GB)		GB 4584 (**SF4B-□<V2>**, **SF4B-□-01<V2>** only)		
Operating range (Note 3)			0.3 to 7 m 0.984 to 22.966 ft	12 to 64 beam channels type: 0.3 to 9 m 0.984 to 29.528 ft 72 to 96 beam channels type: 0.3 to 7 m 0.984 to 22.966 ft	6 to 32 beam channels type: 0.3 to 9 m 0.984 to 29.528 ft 36 to 48 beam channels type: 0.3 to 7 m 0.984 to 22.966 ft
Min. sensing object (Note 4)			ø14 mm ø0.551 in opaque object	ø25 mm ø0.984 in opaque object	ø45 mm ø1.772 in opaque object
Effective aperture angle			±2.5° or less [for an operating range exceeding 3 m 9.843 ft (conforming to IEC 61496-2 / UL 61496-2)]		
Supply voltage			24 V DC ±10 % Ripple P-P 10 % or less		
Control outputs (OSSD 1, OSSD 2)			PNP open-collector transistor / NPN open-collector transistor (switching method) • When selecting PNP output: Max. source current 200 mA, When selecting NPN output: Max. sink current 200 mA • Applied voltage: same as supply voltage (When selecting PNP output: between the control output and +V, When selecting NPN output: between the control output and 0 V) • Residual voltage: 2.5 V or less (When selecting PNP output: source current 200 mA, when selecting NPN output: sink current 200 mA) (when using 20 m 65.617 ft length cable)		
	Operation mode		ON when all beam channels are received, OFF when one or more beam channels are interrupted (OFF also in case of any malfunction in the light curtain or the synchronization signal)(Note 5,6)		
	Protection circuit		Incorporated		
Response time			OFF response: 14 ms or less, ON response: 80 to 90 ms		
Auxiliary output (Non-safety output)			PNP open-collector transistor / NPN open-collector transistor (switching method) • When selecting PNP output: Max. source current 60 mA, When selecting NPN output: Max. sink current 60 mA • Applied voltage: same as supply voltage (When selecting PNP output: between the auxiliary output and +V, When selecting NPN output: between the auxiliary output and 0 V) • Residual voltage: 2.5 V or less (When selecting PNP output: source current 60 mA, when selecting NPN output: sink current 60 mA) (when using 20 m 65.617 ft length cable)		
	Operation mode		OFF when control outputs are ON, ON when control outputs are OFF (Factory setting, operating mode can be changed using the **SFB-HC** handy-controller).		
	Protection circuit		Incorporated		
	Responce time		OFF replay: 34 ms or less, ON replay 110 ms or less		
Interference prevention function			Incorporated (Note 7) (Available only when in series connection for **SF4B-□-03<V2>**)		
Emission halt function / Interlock function			Incorporated / Incorporated [Manual reset / Auto reset (Note 8)]		
External device monitoring function			Incorporated		
Override function / Muting function			Incorporated (Note 7) (excluding **SF4B-□-03<V2>**) / Incorporated (Note 7) (excluding **SF4B-□-03<V2>**)		
Optional functions (Note 9)			Fixed blanking, floating blanking, auxiliary output switching, interlock setting changing, external relay monitor setting changing, muting setting changing, protecting, light emitting amount control		
Environmental resistance	Degree of protection		IP67 / IP65 (IEC)		
	Ambient temperature		–10 to +55 °C +14 to +131 °F (No dew condensation or icing allowed), Storage: –25 to +70 °C –13 to +158 °F		
	Ambient humidity		30 to 85 % RH, Storage: 30 to 95 % RH		
	Ambient illuminance		Incandescent light: 3,500 ℓx or less at the light-receiving face		
	Dielectric strength voltage		1,000 V AC for one min. between all supply terminals connected together and enclosure		
	Insulation resistance		20 MΩ, or more, with 500 V DC megger between all supply terminals connected together and enclosure		
	Vibration resistance		10 to 55 Hz frequency, 0.75 mm 0.030 in amplitude in X, Y and Z directions for two hours each		
	Shock resistance		300 m/s² acceleration (30 G approx.) in X, Y and Z directions for three times each		
Emitting element			Infrared LED (Peak emission wavelength: 870 nm 0.034 mil)		
Material			Enclosure: Aluminium, Upper / lower case: Aluminium, Sensing surface: Polycarbonate and Polyester resin, Cap: PBT		
Connecting method / Cable length			Connector / Total length up to 50 m 164.042 ft is possible for both emitter and receiver, with optional mating cables (Note 10)		
Accessories			**MS-SFB-2** (Intermediate supporting bracket): (Note 11) **MS-SF4BG-2** (Intermediate supporting bracket): (Note 12) **SF4B-TR14** (Test rod): 1 No.	**MS-SFB-2** (Intermediate supporting bracket): (Note 11) **MS-SF4BG-2** (Intermediate supporting bracket): (Note 12) **SF4B-TR25** (Test rod): 1 No.	**MS-SFB-2** (Intermediate supporting bracket): (Note 11) **MS-SF4BG-2** (Intermediate supporting bracket): (Note 12)

Notes: 1) Where measurement conditions have not been specified precisely, the conditions used were an ambient temperature of +20 °C +68 °F.
2) PLe SIL3 compliant from production in August 2009.
3) The operating range is the possible setting distance between the emitter and the receiver.
4) When the floating blanking function is used, the size of the min. sensing object is changed. For details, refer to "**Safety distance**" (p.36~).
5) The outputs are not "OFF" when muting function is active even if the beam channel is interruped.
6) In case the blanking function is valid, the operation mode is changed. For details, refer to "**Safety distance**" (p.36~).
7) Please use 12-core cable.
8) The manual reset and auto reset are possible to be switched depending on the wiring status.
9) In case of using optional function, the handy-controller (**SFB-HC**) (optional) is required. However, a handy-controller cannot be used with the **SF4B-□-01<V2>**, **SF4B-□-03<V2>** and the **SF-C14EX-01**.
10) The cable can be extended within 30 m 98.425 ft (for emitter / receiver) when two light curtains are connected in series, within 20 m 65.617 ft when three light curtains are connected in series. Furthermore, when the muting lamp is used, the cable can be extended within 40 m 131.234 ft (for emitter / receiver).
11) The intermediate supporting bracket (**MS-SFB-2**) is enclosed with the following models. The number of sets required varies depending on the product.
1 set: **SF4B-F□<V2>**..... Light curtain with 79 to 111 beam channels, **SF4B-H□<V2>**..... Light curtain with 40 to 56 beam channels,
SF4B-A□<V2>..... Light curtain with 20 to 28 beam channels
2 sets: **SF4B-F127<V2>**, **SF4B-H□ <V2>**...Light curtain with 64 to 80 beam channels, **SF4B-A□<V2>**...Light curtain with 32 to 40 beam channels
3 sets: **SF4B-H□<V2>** ..... Light curtain with 88 to 96 beam channels, **SF4B-A□<V2>**..... Light curtain with 44 to 48 beam channels
12) The intermediate supporting bracket (**MS-SF4BG-2**) is enclosed with the following models.
1 set: **SF4B-F□G<V2>**..... Light curtain with 79 to 127 beam channels, **SF4B-H□G<V2>**..... Light curtain with 40 to 64 beam channels
SF4B-A□G<V2>..... Light curtain with 20 to 32 beam channels
2 sets: **SF4B-H□G<V2>**..... Light curtain with 72 to 96 beam channels, **SF4B-A□G<V2>**..... Light curtain with 36 to 48 beam channels

SPECIFICATIONS

Control units

Item \ Model No.	**SF-C11** (Note 2)	**SF-C12**	**SF-C13** (Note 2)
Connectable light curtains	**SF4B** / **SF2B** series	**SF4B** series	Light curtains manufactured by Panasonic
Control category	ISO 13849-1 (EN ISO 13849-1, JIS B 9705-1) compliance up to Category 4, PLe standards		
Supply voltage / Current consumption	24 V DC ±10 % Ripple P-P 10 % or less / 100 mA or less (excluding light curtain)		
Fuse (rating)	Built-in electronic fuse, Triggering current: 0.5 A or more, Reset after power down		
Enabling path	NO contact × 3 (13-14, 23-24, 33-34)	NO contact × 2 (13-14, 23-24)	NO contact × 3 (13-14, 23-24, 33-34)
Utilization category	AC-15, DC-13 (IEC 60947-5-1)		
Rated operation voltage (Ue) / Rated operation current (Ie)	30 V DC / 6 A, 230 V AC / 6 A, resistive load (For inductive load, during contact protection) Min. applicable load: 10 mA (at 24 V DC) (Note 3)	24 V DC / 1 A, resistive load (For inductive load, during contact protection) Min. applicable load: 15 mA (at 24 V DC)	30 V DC / 4 A, 230 V AC / 4 A, resistive load (For inductive load, during contact protection) Min. applicable load: 10 mA (at 24 V DC) (Note3)
Contact resistance	100 mΩ or less (initial value)	50 mΩ or less (initial value)	100 mΩ or less (initial value)
Contact protection fuse rating	6 A (slow blow)	3 A (slow blow)	4 A (slow blow)
Pick-up delay (Auto reset / Manual reset)	80 ms or less / 90 ms or less	30 ms or less / 30 ms or less	80 ms or less / 90 ms or less
Response time	10 ms or less	14 ms or less	10 ms or less
Auxiliary output	Safety relay contact (NC contact) ×1 (41-42) (Related to enabling path)	Safety relay contact (NC contact) × 1 (31-32) (Related to enabling path)	Safety relay contact (NC contact) × 1 (41-42) (Related to enabling path)
Rated operation voltage / current	24 V DC / 2 A, Min. applicable load: 10 mA (at 24 V DC)	30 V DC / 3 A, Min. applicable load: 15 mA (at 24 V DC)	24 V DC / 2 A, Min. applicable load: 10 mA (at 24 V DC)
Contact protection fuse rating	2 A (slow blow)	3 A (slow blow)	2 A (slow blow)
Semiconductor auxiliary output (AUX)	<Minus ground (Setting for PNP)> PNP open-collector transistor <Plus ground (Setting for NPN)> NPN open-collector transistor	——	PNP open-collector transistor
Output operation	Related to auxiliary output of light curtain	——	ON when the light curtain is interrupted
Excess voltage category	Ⅱ	Ⅲ	Ⅱ
Polarity selection function (Note 4)	Incorporated (Sliding switch allows selection of plus / minus ground) Minus ground: Correspond to PNP output light curtain Plus ground: Correspond to NPN output light curtain		Incorporated (Cable connection allows selection of plus / minus ground) Minus ground: Correspond to PNP output light curtain Plus ground: Correspond to NPN output light curtain
Pollution degree	2		
Protection	Enclosure: IP40, Terminal: IP20	IP65	Enclosure: IP40, Terminal: IP20
Ambient temperature	–10 to +55 °C +14 to +131 °F (No dew condensation or icing allowed), Storage: –25 to +70 °C –13 to +158 °F		
Enclosure material	ABS	Die-cast aluminum	ABS
Weight	Net weight: 320 g approx.	Net weight: 1 kg approx.	Net weight: 200 g approx.

Notes: 1) Where measurement conditions have not been specified precisely, the conditions used were an ambient temperature of +20 °C +68 °F.
2) **SF-C11** and **SF-C13** have acqusred the Korea S-mark.
3) If several **SF-C11** or **SF-C13** units are being used in a line together, leave a space of 5 mm 0.197 in or more between each unit. If the units are touching each other, reduce the rated operating current for safety output in accordance with the ambient operating temperature as shown in the graphs at right.
4) Please switch the sliding switch to the PNP side for minus ground and to the NPN side for plus ground.
5) For details of control unit **SF-C1**□ (**SF-C10** series), refer to the website or general catalog.

Dilating when SF-C11 units are mounted close together

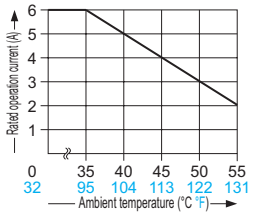

Dilating when SF-C13 units are mounted close together

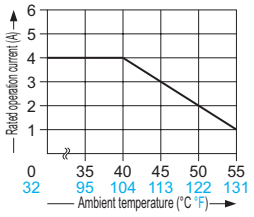

Item \ Model No.	**SF-C14EX**(**-01**) (Note 2)
Connectable light curtains	**SF4B** series
Control category	ISO 13849-1 (EN ISO 13849-1, JIS B 9705-1) compliance up to Category 4, PLe standards
Supply voltage / Current consumption	24 V DC ±10 % Ripple P-P 10 % or less / 0.2 A or less (Excluding light curtain and other external connecting device)
Enabling path (Enabling path 1, 2, 3)	PNP open-collector transistor 2 outputs × 3 or NPN open-collector transistor 2 outputs × 3 (selectable using a slider switch)
Operation mode (Output operation)	Enabling path 1: ON when the light curtain is in light receiving condition, OFF when the light curtain is in light interrupted condition (Note 3) Enabling path 2: ON when the light curtain is in light receiving condition or the muting function is valid OFF when the light curtain is in light interrupted condition and the muting function is invalid (Note 3) Enabling path 3: ON when the emergency stop is invalid, OFF when the emergency stop is valid
Response time	OFF response: 14 ms or less (Enabling path 1 and 2: including the response time of the light curtain) ON response: 90 ms or less (auto-reset) / 140 ms or less (manual reset) (Note 4)
Auxiliary outputs [Auxiliary output 1, 2, 3, 4 (Note 5)]	PNP open-collector transistor × 3 or NPN open-collector transistor × 3 (selectable using a slider switch) <When PNP output is selected> • Maximum source current: 60 mA or less • Applied voltage: same as supply voltage (between the auxiliary output and +V) • Residual voltage: 2 V or less (at 60 mA source current) <When NPN output is selected> • Maximum sink current: 60 mA or less • Applied voltage: same as supply voltage (between the auxiliary output and 0 V) • Residual voltage: 2 V or less (at 60 mA sink current)
Operation mode (Output operation)	Auxiliary output 1: ON when the muting function is invalid, OFF when the muting function is valid Auxiliary output 2: ON when the override function is invalid, OFF when the override function is valid Auxiliary output 3: ON when the muting lamp is normal, OFF when the muting lamp is error Auxiliary output 4: ON when the light curtain is in light interrupted condition, OFF when the light curtain is in light receiving condition (Note 5)
Muting lamp output	Applicable muting lamp: 24 V DC, 3.6 to 30 W (L1, L2 of each unit)
Protection	Enclosure: IP40, Terminal: IP20
Ambient temperature	–10 to +55 °C +14 to +131 °F (No dew condensation or icing allowed), Storage: –25 to +70 °C –13 to +158 °F
Material	Enclosure: ABS
Connection terminal	Detachable spring-cage terminal
Weight	Net weight: 250 g approx.

Notes: 1) Where measurement conditions have not been specified precisely, the conditions used were an ambient temperature of +20 °C +68 °F.
2) **SF-C14EX-01** is Handy-controller non-compatible type.
3) Both enabling path 1 and 2 are OFF when the emergency stop is valid regardless of whether the light curtain is in the light receiving or light interrupted condition.
4) The auto-reset cannot be used with enabling path 3.
5) The auxiliary output incorporated in the **SF4B** series is outputed.
6) For details of control unit **SF-C14EX**(**-01**), refer to the website or general catalog.

SPECIFICATIONS

Handy-controller

Item \ Model No.	SFB-HC
Supply voltage	24 V DC ±10 % Ripple P-P10 % or less (common to light curtain power supply)
Current consumption	65 mA or less
Communication method	RS-485 two-way communications (Specific procedure)
Digital display	4-digit red LED display × 2 (Selected beam channels, setting contents etc. are displayed.)
Function indicator	Green LED × 9 (set function is displayed.)
Functions	Fixed blanking (Factory setting: Disabled) / Floating blanking (Factory setting: Disabled) / Auxiliary output change (Factory setting: Negative Logic of OSSD) / Light emitting amount control (Factory setting: Disabled) / Muting setting change [Factory setting: All beam channels enabled, A = B, Setting of the muting lamp diagnosis function enabled (Ver. 2 or later), Muting sensor output operation setting N.O. / N.O. (Ver. 2.1 or later)] Interlock setting change (Factory setting: start / restart) / External device monitoring setting change (Factory setting: Enabled, 300 ms) / Override setting changing function 60 sec. (Ver. 2.1 or later) / Setting detail monitoring / Protecting (Factory setting: Disabled)(Factory password setting: 0000) / Initialization / Copy
Ambient temperature	–10 to +55 °C +14 to +131 °F (No dew condensation or icing allowed), Storage: –25 to +70 °C –13 to +158 °F
Ambient humidity	30 to 85 % RH, Storage: 30 to 85 % RH
Voltage withstandability	1,000 V AC for one min. between all supply terminals connected together and enclosure
Insulation resistance	20 MΩ , or more, with 500 V DC megger between all supply terminals connected together and enclosure
Cable	8-core shielded cable, 0.5 m 1.640 ft long, with a connector at the end (2 cables)
Weight	Net weight: 200 g approx.
Accessories	Adapter cable: 2 cables

Note: Where measurement conditions have not been specified precisely, the conditions used were an ambient temperature of +20 °C +68 °F.

Laser alignment tool

Item \ Model No.	**SF-LAT-2N** / **SF-LAT-4BG** (For **SF4B-□G**)
Supply voltage	3 V (LR6 battery × 2 pcs.)
Battery	1.5 V (LR6 battery) × 2 pcs. (replaceable)
Battery lifetime	30 hours approx. of continuous operation (LR6 battery, at +25 °C +77 °F ambient temperature)
Light source	Red semiconductor laser: Class 2 (IEC / JIS / FDA) (Max. output: 1 mW, Peak emission wavelength: 650 nm 0.026 mil) (Note 2)
Spot diameter	10 mm 0.394 in approx. (at 5 m 16.404 ft distance)
Ambient temperature	0 to +40 °C +32 to +104 °F (No dew condensation), Storage: 0 to +55 °C +32 to +131 °F
Ambient humidity	35 to 85 % RH, Storage: 35 to 85 % RH
Material	Enclosure: ABS, Mounting part: Aluminum
Weight	Net weight: 200 g approx. (including batteries)
Accessories	LR6 battery: 2 pcs.

Notes: 1) Where measurement conditions have not been specified precisely, the conditions used were an ambient temperature of +20 °C +68 °F.
2) As for FDA regulation, the product complies with 21 CFR 1040.10 and 1040.11 based on Laser Notice No. 50, dated June 24, 2007, issued by CDRH under the FDA.

Corner mirror

Item \ Model No.		**RF-SFBH-□**
Attenuation rate of sensing range		With one mirror: Declined to 90 %, With two mirrors: Declined to 80 % (When used in combination with the **SF4B** series)
Environmental resistance	Ambient temperature	–10 to +55 °C +14 to +131 °F (No dew condensation or icing allowed), Storage: –25 to +70 °C –13 to +158 °F
	Ambient humidity	30 to 85 % RH, Storage: 30 to 95 % RH
	Vibration resistance	10 to 55 Hz frequency, 0.75 mm 0.030 in amplitude in X, Y and Z directions for two hours each
	Shock resistance	300 m/s² acceleration (30 G approx.) in X, Y and Z directions for three times each
Material		Enclosure: Alminium, Mounting bracket: Stainless steel, Mirror (rear surface mirror): Glass, Side cover: EPDM
Accessories		Intermediate supporting bracket: 1 set (**RF-SFBH-40/48/56/64**), 2 sets (**RF-SFBH-72/80/88/96**)

Note: Where measurement conditions have not been specified precisely, the conditions used were an ambient temperature of +20 °C +68 °F.

I/O CIRCUIT AND WIRING DIAGRAMS

I/O circuit diagram

<In case of using I/O circuit for PNP output>

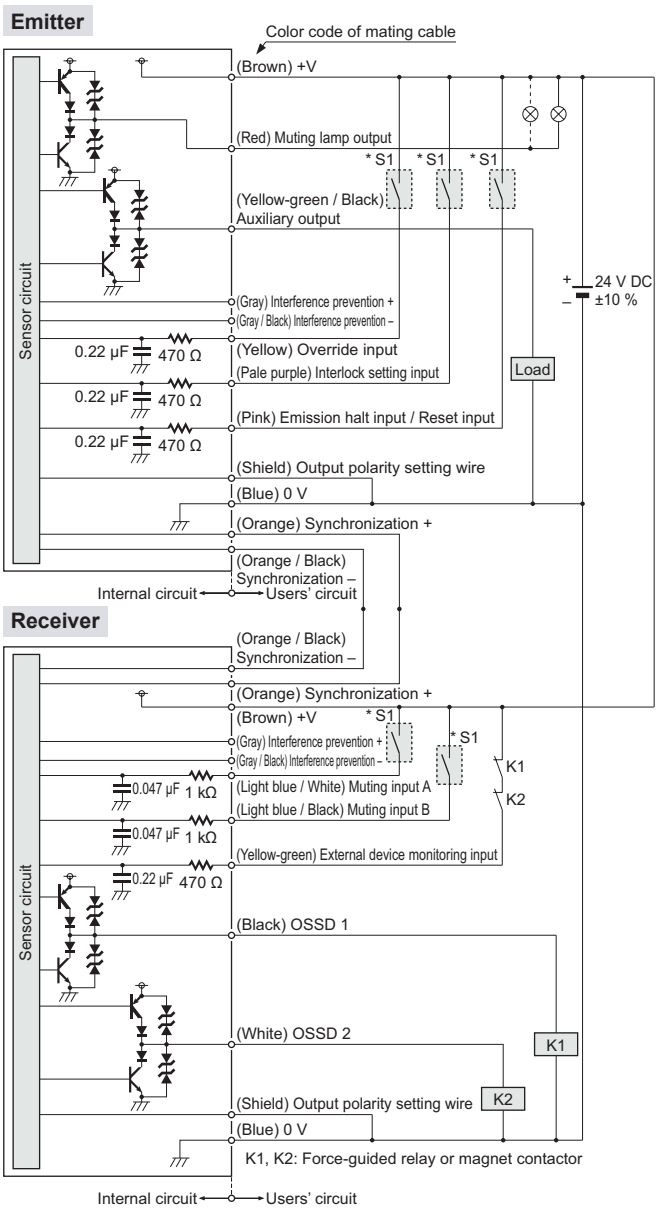

Note: The above diagram is when using a 12-core cable. If an 8-core cable is used, the red, yellow, gray, gray / black, light blue / white and light blue / black lead wires are absent.

* S1

Switch S1
- Emission halt input / Reset input
  For manual reset
  Vs to Vs – 2.5 V (sink current 5 mA or less): Emission halt (Note 1)
  Open: Emission
  For automatic reset
  Vs to Vs – 2.5 V (sink current 5 mA or less): Emission (Note 1)
  Open: Emission halt
- Interlock setting input, Override input, Muting input A / B, External device monitoring input
  Vs to Vs – 2.5 V (sink current 5 mA or less): Enabled (Note 1)
  Open: Disabled

Note: Vs is the applying supply voltage.

<In case of using I/O circuit for NPN output>

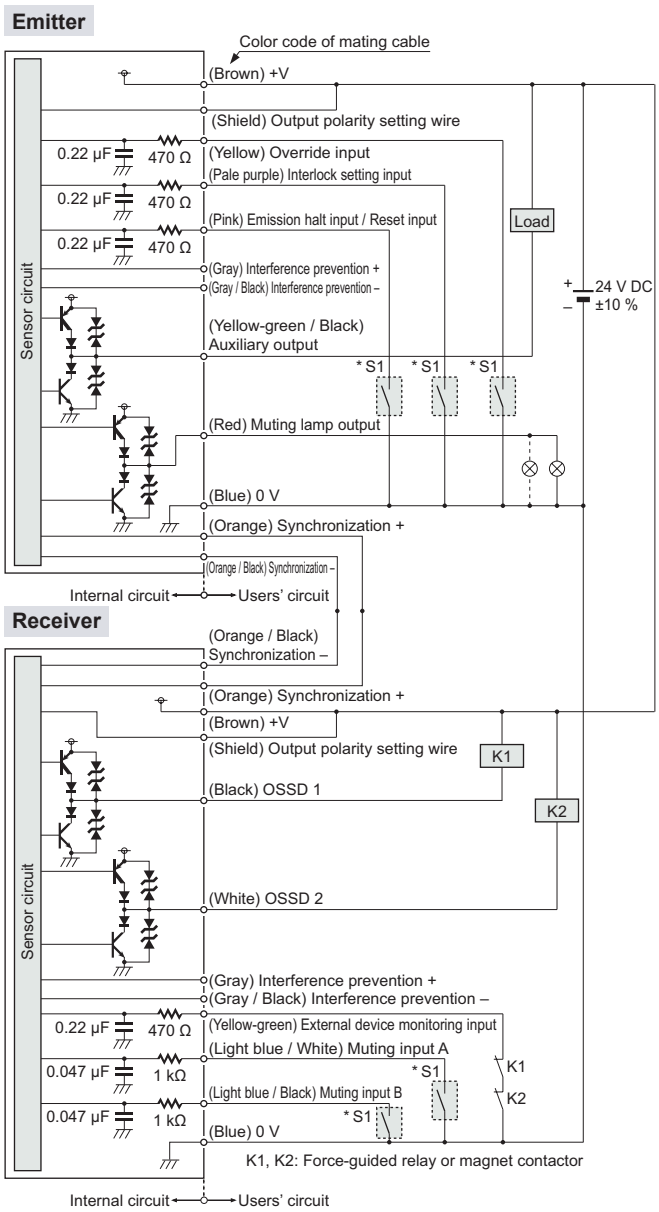

Note: The above diagram is when using a 12-core cable. If an 8-core cable is used, the red, yellow, gray, gray / black, light blue / white and light blue / black lead wires are absent.

* S1

Switch S1
- Emission halt input / Reset input
  For manual reset
  0 to +1.5 V (source current 5 mA or less): Emission halt
  Open: Emission
  For automatic reset
  0 to +1.5 V (source current 5 mA or less): Emission
  Open: Emission halt
- Interlock setting input, Override input, Muting input A / B, External device monitor input
  0 to +1.5 V (source current 5 mA or less): Enabled
  Open: Disabled

I/O CIRCUIT AND WIRING DIAGRAMS

Refer to the manual on our website for details.

Connection example

Standard components (8-core cable): Interlock function “enabled (manual reset)”, external device monitoring function “enabled”

<In case of using I/O circuit for PNP output>

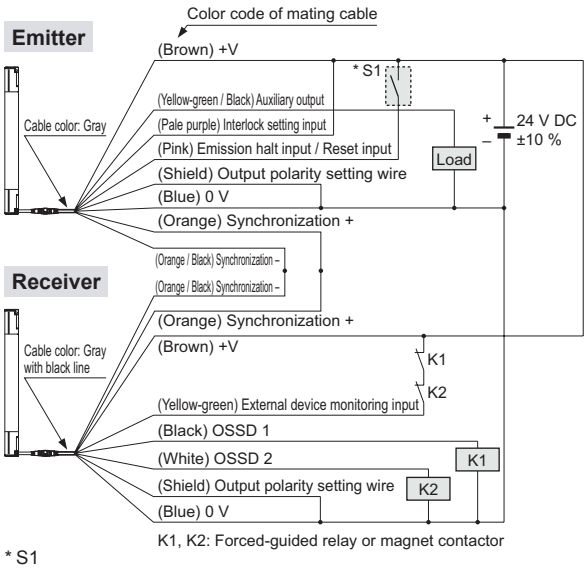

* S1

Switch S1
- Emission halt input / Reset input
  For manual reset
  Vs to Vs – 2.5 V (sink current 5 mA or less): Emission halt (Note)
  Open: Emission
  For automatic reset
  Vs to Vs – 2.5 V (sink current 5 mA or less): Emission (Note)
  Open: Emission halt

Note: Vs is the applying supply voltage.

The diagram at left shows the configuration when using PNP output, interlock function “enabled (manual reset)” and external device monitoring function “enabled”.

In case of setting the interlock function to “disabled (automatic reset)”

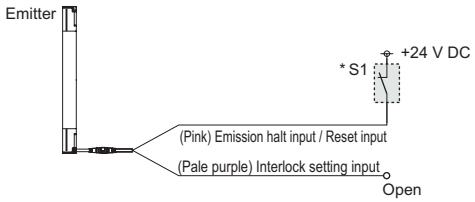

* Refer to the **SF4B<V2>** manual for details of the interlock function.

In case of setting the external device monitoring function to “disabled”

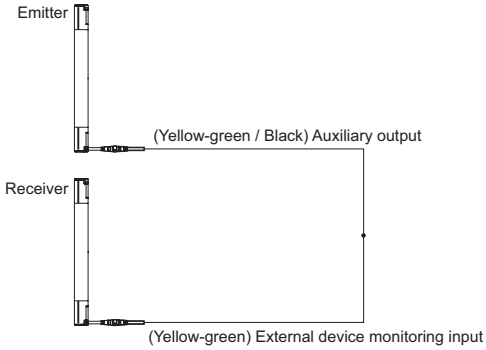

* Refer to the **SF4B<V2>** manual for details of the external device monitoring function.

<In case of using I/O circuit for NPN output>

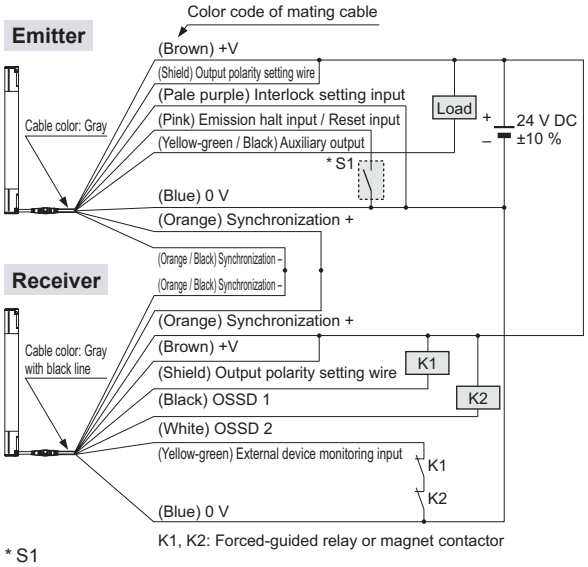

* S1

Switch S1
- Emission halt input / Reset input
  For manual reset
  0 to +1.5 V (source current 5 mA or less): Emission halt
  Open: Emission
  For automatic reset
  0 to +1.5 V (source current 5 mA or less): Emission
  Open: Emission halt

The diagram at left shows the configuration when using NPN output, interlock function “enabled (manual reset)” and external device monitoring function “enabled”.

In case of setting the interlock function to “disabled (automatic reset)”

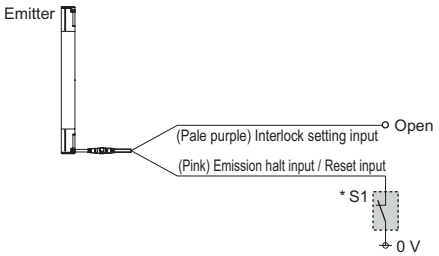

* Refer to the **SF4B<V2>** manual for details of the interlock function.

In case of setting the external device monitoring function to “disabled”

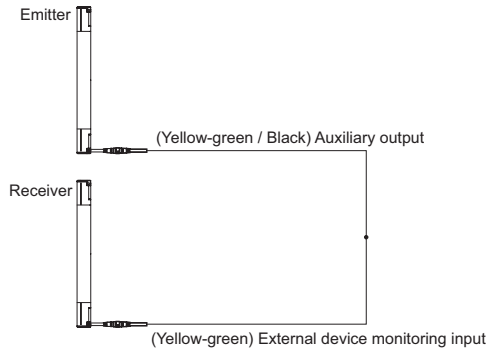

* Refer to the **SF4B<V2>** manual for details of the external device monitoring function.

I/O CIRCUIT AND WIRING DIAGRAMS

Refer to the manual on our website for details.

Connection example

Muting control components (12-core cable, with interference prevention wires): Interlock function "disabled (automatic reset)", external device monitoring function "disabled"

<In case of using I/O circuit for PNP output>

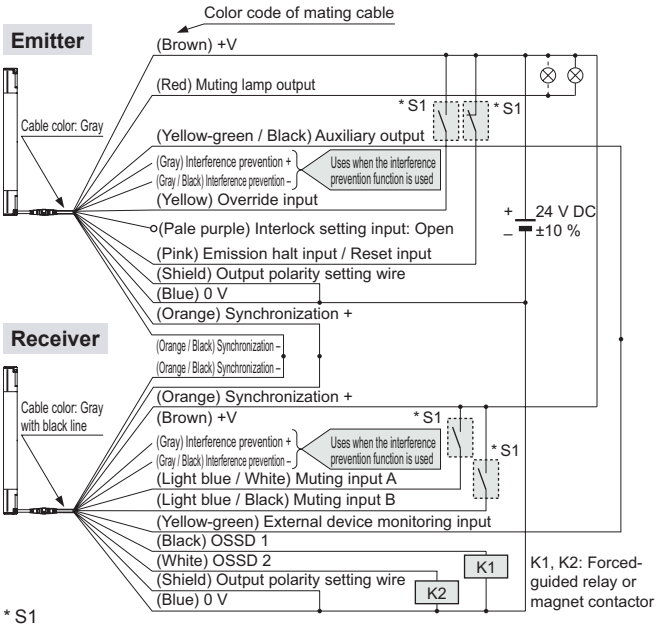

* S1

Switch S1
- Emission halt input / Reset input
  For manual reset
  Vs to Vs – 2.5 V (sink current 5 mA or less): Emission halt (Note), Open: Emission
  For automatic reset
  Vs to Vs – 2.5 V (sink current 5 mA or less): Emission (Note), Open: Emission halt
- Override input, Muting input A / B, External device monitoring input
  Vs to Vs – 2.5 V (sink current 5 mA or less): Enabled (Note), Open: Disabled

Note: Vs is the applying supply voltage.

The diagram at left shows the configuration when using PNP output, interlock function "disabled (automatic reset)" and external device monitoring function "disabled".

In case of setting the interlock function to "enabled (manual reset)"

- When the interlock function is "enabled (manual reset)", the override function cannot be used.

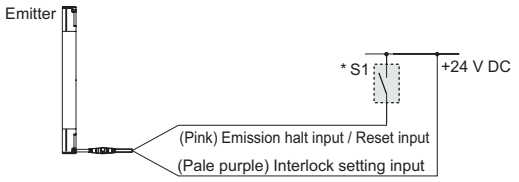

* Refer to the **SF4B<V2>** manual for details of the interlock function.

In case of setting the external device monitoring function to "enabled"

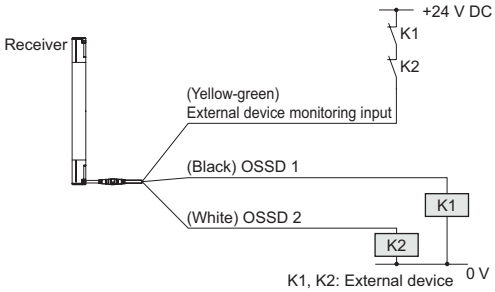

* Refer to the **SF4B<V2>** manual for details of the external device monitoring function.

<In case of using I/O circuit for NPN output>

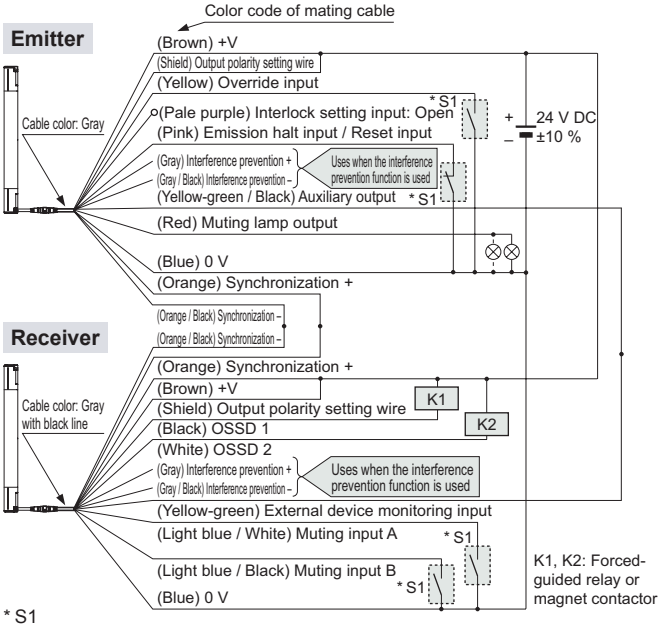

* S1

Switch S1
- Emission halt input / Reset input
  For manual reset
  0 to +1.5 V (source current 5 mA or less): Emission halt, Open: Emission
  For automatic reset
  0 to +1.5 V (source current 5 mA or less): Emission, Open: Emission halt
- Override input, Muting input A / B, External device monitoring input
  0 to +1.5 V (source current 5 mA or less): Enabled, Open: Disabled

The diagram at left shows the configuration when using NPN output, interlock function "disabled (automatic reset)" and external device monitoring function "disabled".

In case of setting the interlock function to "enabled (manual reset)"

- When the interlock function is "enabled (manual reset)", the override function cannot be used.

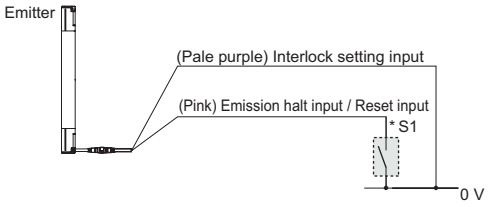

* Refer to the **SF4B<V2>** manual for details of the interlock function.

In case of setting the external device monitoring function to "enabled"

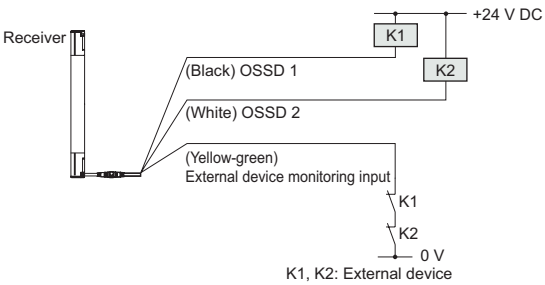

* Refer to the **SF4B<V2>** manual for details of the external device monitoring function.

I/O CIRCUIT AND WIRING DIAGRAMS

SF-C11

SF4B series wiring diagram (Control Category 4)

For PNP output (minus ground)

- Set the light curtain input polarity selection switch to the PNP side and ground the 0 V line.

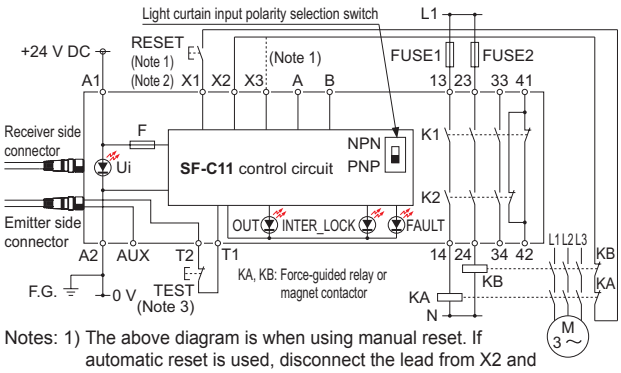

Notes: 1) The above diagram is when using manual reset. If automatic reset is used, disconnect the lead from X2 and connect it to X3. In this case, a reset (RESET) button is not needed.
2) Use a momentary-type switch as the reset (RESET) button.
3) Emission halt occurs when the test (TEST) button is open, and emission occurs when the test (TEST) button is short-circuited. If not using the test (TEST) button, short-circuit T1 and T2.

For NPN output (plus ground)

- In the above diagram, set the light curtain input polarity selection switch to the NPN side and ground the + side.

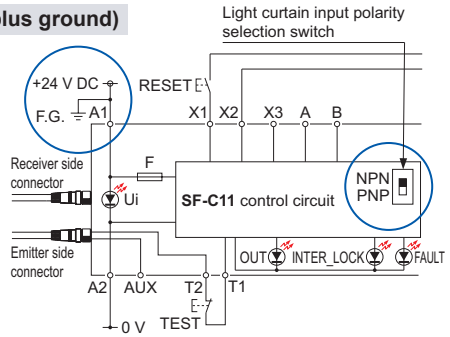

When **SF-C11** is connected to the light curtain, be sure to use the following mating cable.
SFB-CB□, SFB-CCJ10□

Terminal arrangement diagram

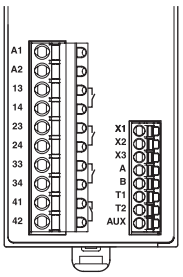

Terminal	Function
A1	+24 V DC
A2	0 V
13-14, 23-24, 33-34	Enabling path (NO contact × 3)
41-42	Auxiliary output (NC contact × 1)
X1	Reset output terminal
X2	Reset input terminal (Manual)
X3	Reset input terminal (Automatic)
A	Not used
B	
T1	Test output terminal
T2	Test input terminal
AUX	Semiconductor auxiliary output

Pin layout for light curtain connectors

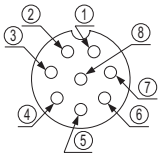

Connector pin No.	Emitter side connector	Receiver side connector
①	Interlock	OSSD 2
②	+24 V DC	+24 V DC
③	Emission halt	OSSD 1
④	Auxiliary output	EDM (External relay monitor)
⑤	Synchronization wire +	Synchronization wire +
⑥	Synchronization wire –	Synchronization wire –
⑦	0 V	0 V
⑧	Shield wire	Shield wire

SF-C12

SF4B series wiring diagram (Control Category 4)

For PNP output (minus ground)

- Set the two light curtain input polarity select switches to the PNP side and connect the FG terminal to the 0 V line.

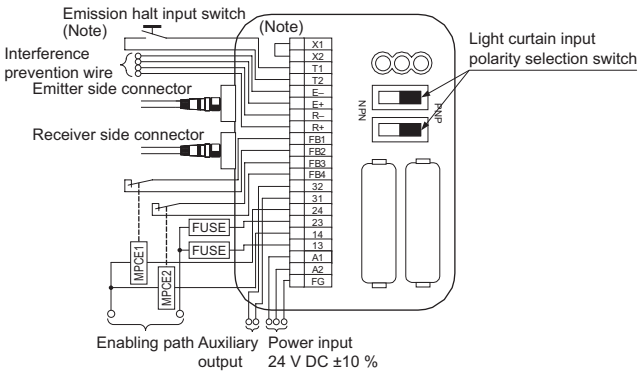

Note: The above diagram is when using manual reset. If automatic reset is used, connect a normally closed type pushbutton switch between T1 and T2 and leave between X1 and X2 open.

For NPN output (plus ground)

- In the above diagram, set the two light curtain input polarity selection switches to the NPN side and connect the F.G. terminal to the + side.

When **SF-C12** is connected to the light curtain, be sure to use the following maing cable.
SFB-CB05-MU, SFB-CCJ10□-MU

Terminal arrangement diagram

Terminal	Function
FG	Frame ground (F.G.) terminal
A2	0 V
A1	+24 V DC
13-14, 23-24	Enabling path (NO contact × 2)
31-32	Auxiliary output (NC contact × 1)
FB4	External relay monitor terminal 2
FB3	
FB2	External relay monitor terminal 1
FB1	

Terminal	Function
R+	Interference prevention wire – (Receiver side)
R–	Interference prevention wire + (Receiver side)
E+	Interference prevention wire – (Emitter side)
E–	Interference prevention wire + (Emitter side)
T2	Emission halt input terminal
T1	
X2	Automatic reset / manual reset selection terminal
X1	Manual reset: X1 – X2 short-circuited

Pin layout for light curtain connectors

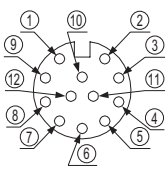

Note: Input and output for pin Nos. ⑪ and ⑫ are not used by this product.

Connector pin No.	Emitter side connector	Receiver side connector
①	Interlock	OSSD 2
②	+24 V DC	+24 V DC
③	Emission halt	OSSD 1
④	Auxiliary output	EDM (External relay monitor)
⑤	Synchronization wire +	Synchronization wire +
⑥	Synchronization wire –	Synchronization wire –
⑦	0 V	0 V
⑧	Shield wire	Shield wire
⑨	Interference prevention wire +	Interference prevention wire +
⑩	Interference prevention wire –	Interference prevention wire –
⑪	(Override input)	(Muting input 1)
⑫	(Muting lamp output)	(Muting input 2)

I/O CIRCUIT AND WIRING DIAGRAMS

SF-C13

SF4B series wiring diagram (Control Category 4)

For PNP output (minus ground)

• Connect the light curtain control outputs OSSD 1 and OSSD 2 to S1 and S2 respectively.

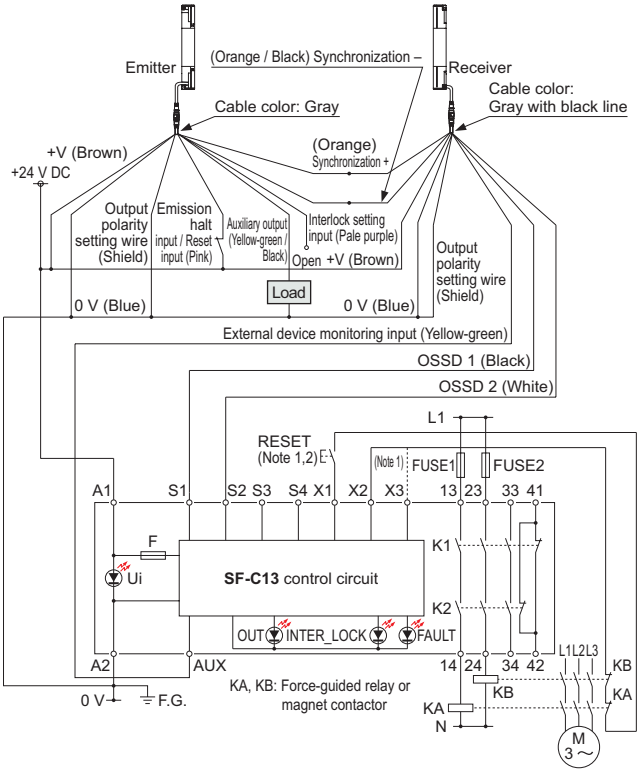

Notes: 1) The above diagram is when using manual reset. If automatic reset is used, disconnect the lead from X2 and connect it to X3. In this case, a reset (RESET) button is not needed.
2) Use a momentary-type switch as the reset (RESET) button.

For NPN output (plus ground)

• Connect the light curtain control outputs OSSD 1 and OSSD 2 to S4 and S2 respectively and ground the + side.

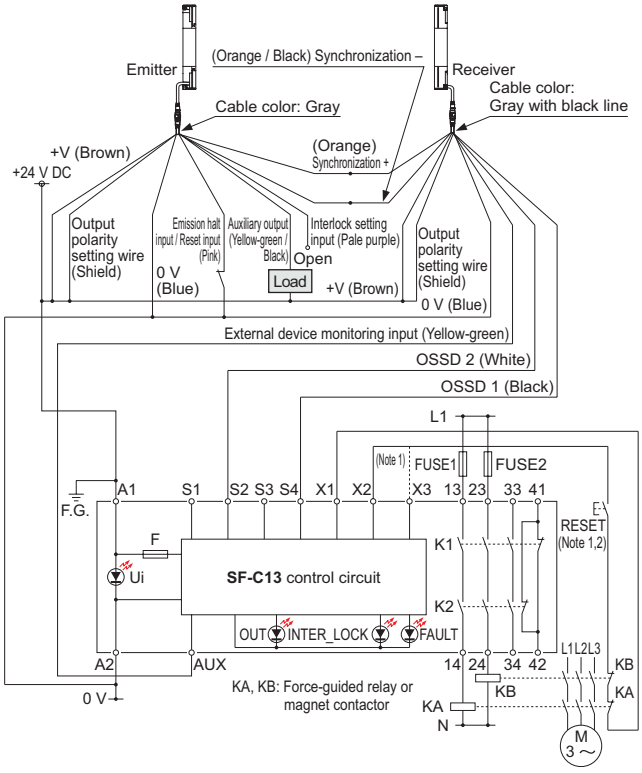

Notes: 1) The above diagram is when using manual reset. If automatic reset is used, disconnect the lead from X2 and connect it to X3. In this case, a reset (RESET) button is not needed.
2) Use a momentary-type switch as the reset (RESET) button.

Terminal arrangement diagram

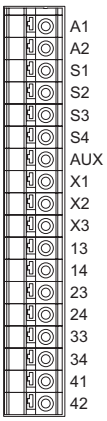

Terminal	Function
A1	+24 V DC
A2	0 V
S1 to S4	Light curtain control output (OSSD) input terminal
AUX	Semiconductor auxiliary output
X1	Reset output terminal
X2	Reset input terminal (Manual)
X3	Reset input terminal (Automatic)
13-14, 23-24, 33-34	Enabling path (NO contact × 3)
41-42	Auxiliary output (NC contact × 1)

Use a separate terminal block to carry out wiring for light curtains that cannot be connected to the **SF-C13**.

When **SF-C13** is connected to the light curtain, be sure to use the following descrete wire mating cable.
SFB-CCB□(-MU), SFB-CC□(-MU)

I/O CIRCUIT AND WIRING DIAGRAMS

SF-C14EX(-01)

SF4B series wiring diagram (Control Category 4)

For PNP output (minus ground)

• Set the output polarity selection switch to the PNP side and ground the 0 V line.

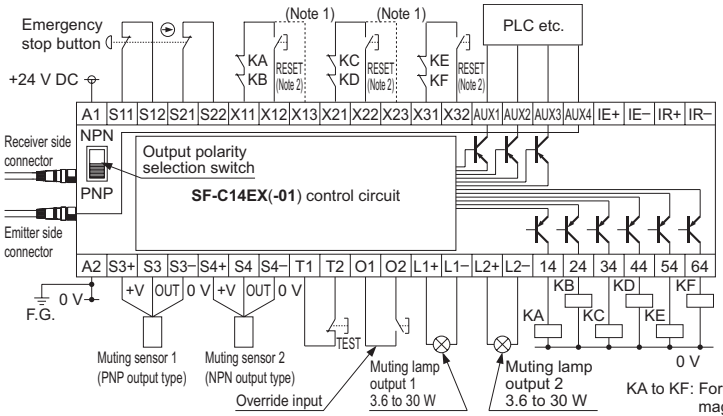

- When **SF-C14EX** is connected to the light curtain, be sure to use the following mating cable. **SFB-CB□-EX**, **SFB-CCJ10□**
- If the NO (Normally Open) contact switch is used as a muting sensor, wire it as shown in the figure below.

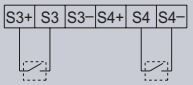

- If the emergency stop button is not used, short-circuit between the terminals S11 to S12 and S21 to S22 directly.

Notes: 1) The above diagram is when using manual reset. If automatic reset is used, disconnect the lead from X12 and X22, and connect them to X13 and X23, as shown by the dotted lines. In this case, a reset (RESET) button is not needed. Terminals X31 to X32 are for manual reset only.
2) Use a momentary-type switch for the reset (RESET) button.

For NPN output (plus ground)

• Set the output polarity selection switch to the NPN side and ground the side of the power supply input.

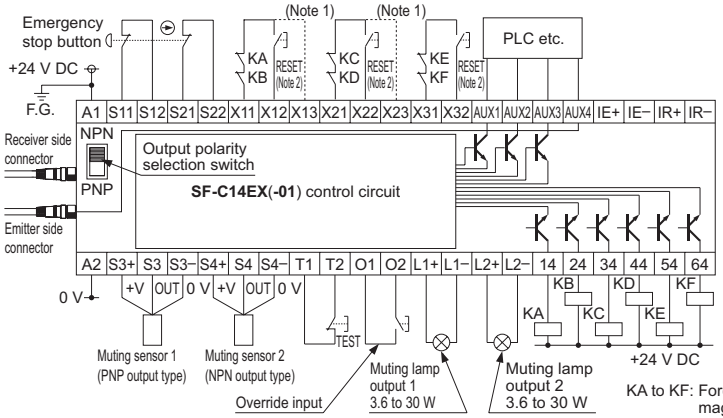

Notes: 1) The left diagram is when using manual reset. If automatic reset is used, disconnect the lead from X12 and X22, and connect them to X13 and X23, as shown by the dotted lines. In this case, a reset (RESET) button is not needed. Terminals X31 to X32 are for manual reset only.
2) Use a momentary-type switch for the reset (RESET) button.

Terminal arrangement diagram

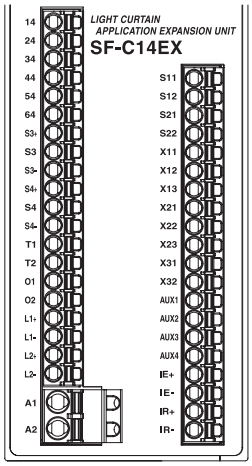

Terminal	Function	Terminal	Function
14	Enabling path 1, Beam received / Beam interrupted output of the light curtain	S11	Emergency stop contact input 2 NC input Between S11 and S12 Between S21 and S22
24		S12	
34	Enabling path 2, light curtain output including the muting function	S21	
44		S22	
54	Enabling path 3 Emergency stop output	X11	Enabling path 1 reset input X11 - X12: Manual reset X11 - X13: Automatic reset
64		X12	
S3+	Muting sensor input 1 (PNP output type) S3+, S3–: Power supply S3: Sensor output	X13	
S3		X21	Enabling path 2 reset input X21 - X22: Manual reset X21 - X23: Automatic reset
S3–		X22	
S4+	Muting sensor input 2 (NPN output type) S4+, S4–: Power supply S4: Sensor output	X23	
S4		X31	Enabling path 3 reset input X31 - X32: Manual reset
S4–		X32	
T1	Test input terminal Open: Test mode Short-circuit: Normal operation	AUX1	Auxiliary output 1, Muting output
T2		AUX2	Auxiliary output 2, Override output
O1	Override input terminal Open: Invalid Short-circuit: Valid	AUX3	Auxiliary output 3, Blown lamp output
O2		AUX4	Auxiliary output 4, Light curtain auxiliary output
L1+	Muting lamp output 1	IE+	Interference prevention terminal, Emitter side +
L1–		IE–	Interference prevention terminal, Emitter side –
L2+	Muting lamp output 2	IR+	Interference prevention terminal, Receiver side +
L2–		IR–	Interference prevention terminal, Receiver side –
A1	+24 V DC		
A2	0 V		

Pin layout for light curtain connectors

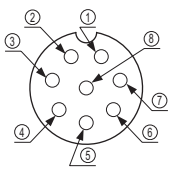

Connector pin No.	Emitter side connector	Receiver side connector
①	Interference prevention wire +	Interference prevention wire +
②	+24 V DC	+24 V DC
③	Interference prevention wire –	Interference prevention wire –
④	Auxiliary output	Not used
⑤	Synchronization wire +	Synchronization wire +
⑥	Synchronization wire –	Synchronization wire –
⑦	0 V	0 V
⑧	Shield wire	Shield wire

PRECAUTIONS FOR PROPER USE

Refer to the manual on our website for details.

Interlock function

- The selection of manual reset / automatic reset is available by applying the interlock input wiring. The interlock becomes available by selecting manual reset. (Refer to the **SF4B<V2>** manual for details.)

Emission halt function

- This function stops the emission process of the emitter. You can select whether emission is on or halted by means of the connection status for the emission halt input / reset input wire (pink).
- During emission halt, the control outputs (OSSD 1, OSSD 2) become OFF status.
- By using this function, malfunction due to extraneous noise or abnormality in the control outputs (OSSD 1, OSSD 2) and the auxiliary output can be determined even from the machinery side.
- Normal operation is restored when the emission halt input / reset input wire (pink) is connected to 0 V or +V. (Refer to the **SF4B<V2>** manual for details.)

Auxiliary output (Non-safety output)

- This light curtain incorporates the auxiliary output (yellowgreen / black) for the non-safety output. The auxiliary output is incorporated with the emitter. (Refer to the **SF4B<V2>** manual for details.)

External device monitoring function

- This is the function for checking whether the external safety relay connected to the control outputs (OSSD 1, OSSD 2) perform normally in accordance with the control outputs (OSSD 1, OSSD 2) or not. Monitor the contacting point “b” of the external safety relay, and if any abnormality such as deposit of the contacting point, etc. is detected, change the status of the light curtain into lockout one, and turn OFF the control outputs (OSSD 1, OSSD 2). (Refer to the **SF4B<V2>** manual for details.)

Muting function

- This function turns the safety function of this light curtain into disabled temporarily. When the control outputs (OSSD 1, OSSD 2) are ON, this function is available for passing the workpiece through the sensing area of the light curtain without stopping the machinery.
  The muting function becomes valid when all the conditions listed below are satisfied.
  However, this function connot be used with the **SF4B-□-03<V2>**.
  ① The control outputs (OSSD 1, OSSD 2) shall be ON.
  ② The incandescent lamp with 3 to 10 W shall be connected to the muting lamp output (red).
  ③ The output of the muting sensors A and B shall be changed from OFF (open) to ON. At this time, the time difference occurred by changing the output of the muting sensors A and B into ON status shall be within 0.03 to 3 sec.
- The following devices, photoelectric sensor with semiconductor output, inductive proximity sensor, position switch on N.O. (Normally open) contact, etc. are available for applying to the muting sensor.
- In case of using the muting function, please order 12-core cable.
  (Refer to the **SF4B<V2>** manual for details.)

Override function

- This function sets the safety function of this light curtain enabled forcibly. When using the muting function, the override function can be used to start the machinery at times such as when the control outputs (OSSD 1 and OSSD 2) are OFF or when the muting sensors are ON when the line is to be started.
  The override function becomes valid when all the conditions listed below are satisfied.
  However, this function cannot be used with the **SF4B-□-03<V2>**.
  (Refer to the **SF4B<V2>** manual for details.)

Series connection

Connectable up to 3 sets of light curtains (however, 192 beam channels max.)
(Refer to the **SF4B<V2>** manual for details.)

Parallel connection

Connectable up to 3 sets of light cartains
(Refer to the **SF4B<V2>** manual for details.)

Series and parallel mixed connection

Connectable up to 3 sets of light curtains (however, 192 beam channels max.)
(Refer to the **SF4B<V2>** manual for details.)

Wiring

Refer to the applicable regulations for the region where this device is to be used when setting up the device. In addition, make sure that all necessary measures are taken to prevent possible dangerous operating errors resulting from earth faults.

- Make sure to carry out the wiring in the power supply off condition.
- Verify that the supply voltage variation is within the rating.
- If power is supplied from a commercial switching regulator, ensure that the frame ground (F.G.) terminal of the power supply is connected to an actual ground.
- In case noise generating equipment (switching regulator, inverter motor, etc.) is used in the vicinity of this sensor, connect the frame ground (F.G.) terminal of the equipment to an actual ground.
- Do not run the wires together with high-voltage lines or power lines or put them in the same raceway. This can cause malfunction due to induction.

Part description and function

- (Refer to the **SF4B<V2>** manual for details.)

Others

- Do not use during the initial transient time (2 sec.) after the power supply is switched on.
- Avoid dust, dirt and steam.
- Take care that the light curtain does not come in direct contact with water, oil, grease, or organic solvents, such as, thinner, etc.
- Take care that the light curtain is not directly exposed to fluorescent light from a rapid-starter lamp or a high frequency lighting device, as it may affect the sensing performance.

PRECAUTIONS FOR PROPER USE

- When this device is used in the “PSDI mode”, an appropriate control circuit must be configured between this device and the machinery. For details, be sure to refer to the standards or regulations applicable in each region or country.
- To use this product in the U.S.A., refer to OSHA 1910. 212 and OSHA 1910. 217 for installation, and in Europe, refer to EN 999 as well. Observe your national and local requirements before installing this product.

- This catalog is a guide to select a suitable product. Be sure to read instruction manual attached to the product prior to its use.
- Both emitter and receiver are combined adjusted on factory setting, please apply both emitter and receiver with the same serial No. The serial No. is indicated on the plates of both emitter and receiver. (Indicated under model No.)

- Make sure to carry out the test run before regular operation.
- This safety system is for use only on machinery in which the dangerous parts can be stopped immediately, either by an emergency stop unit or by disconnecting the power supply. Do not use this system with machinery which cannot be stopped at any point in its operation cycle.

Sensing area

- Make sure to install this product such that any part of the human body must pass through its sensing area in order to reach the dangerous parts of the machinery. If the human body is not detected, there is a danger of serious injury or death.
- Do not use any reflective type or retroreflective type arrangement.
- Furthermore, facing several receivers towards one emitter, or vice versa, could produce a non-sensing area or cause mutual interference, which may result in serious injury or death.

Correct mounting method

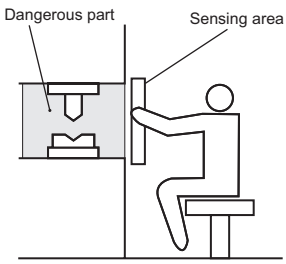

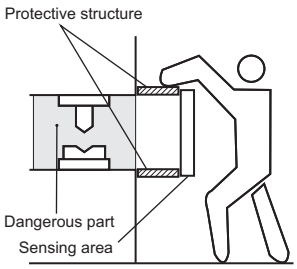

Wrong mounting method

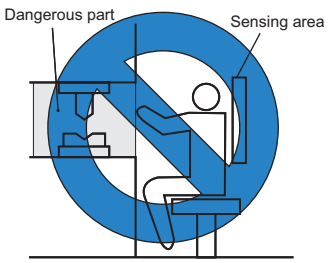

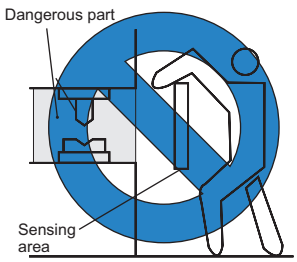

Safety distance

- Calculate the safety distance correctly, and always maintain a distance which is equal to or greater than the safety distance, between the sensing area of this light curtain and the dangerous parts of the machinery. (Please check the latest standards for the equation.) If the safety distance is miscalculated or if sufficient distance is not maintained, there is a danger of serious injury or death.
- Before designing the system, refer to the relevant standards of the region where this device is to be used and then install this device. Also, the below calculation is valid only when the intrusion direction is perpendicular to the sensing area. In case the intrusion direction is not perpendicular to the sensing area, be sure to refer to the relevant standard (regional standard, specification of the machine, etc.) for details of the calculation.

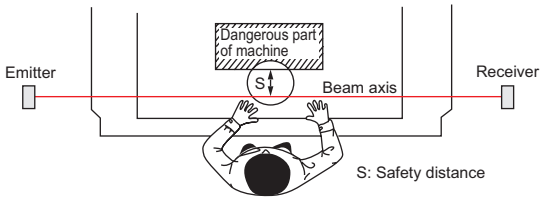

The sizes of the minimum sensing objects for this device vary depending on whether or not the floating blanking function is being used. Calculate the safety distance with the proper size of the minimum sensing object and appropriate equation.

Size of minimum sensing object when applying floating blanking function

	Min. sensing object when applying floating blanking function			
	Invalid	Setting (Note)		
		1 beam channel	2 beam channels	3 beam channels
SF4B-F□(G) (Min. sensing object ø14 mm ø0.551 in)	ø14 mm ø0.551 in	ø24 mm ø0.945 in	ø34 mm ø1.339 in	ø44 mm ø1.732 in
SF4B-H□(G) (Min. sensing object ø25 mm ø0.984 in)	ø25 mm ø0.984 in	ø45 mm ø1.772 in	ø65 mm ø2.559 in	ø85 mm ø3.346 in
SF4B-A□(G) (Min. sensing object ø45 mm ø1.772 in)	ø45 mm ø1.772 in	ø85 mm ø3.346 in	ø125 mm ø4.921 in	ø165 mm ø6.496 in

Note: Refer to p.10 for details of the floating blanking function. However, the floating blanking function cannot be used with the **SF4B-□-01<V2>**, the **SF4B-□-03<V2>** and **SF-C14EX-01**.

For use in Europe (EU) (as EN 999)] (Also applicable to ISO 13855 / JIS B 9715)

For intrusion direction perpendicular to the sensing area
<In case that the minimum sensing object is ø40 mm ø1.575 in or less>

- Equation ① $S = K \times T + C$

S: Safety distance (mm)
Minimum required distance between the sensing area surface and the dangerous parts of the machine

K: Intrusion velocity of operator’s body or object (mm/sec.)
Normally taken as 2,000 (mm/sec.) for calculation

T: Response time of total equipment (sec.)
$T = T_m + T_{SF4B}$
T_m: Maximum halting time of machinery (sec.)
T_{SF4B}: Response time of the **SF4B<V2>** series (sec.)

C: Additional distance calculated from the size of the minimum sensing object of the light curtain (mm)
However, the value of “C” cannot be less than 0.
$C = 8 \times (d - 14)$
d: Minimum sensing object diameter (mm)

PRECAUTIONS FOR PROPER USE

Refer to the manual on our website for details.

• For calculating the safety distance “S”, there are the following five cases.
First calculate by substituting the value K = 2,000 (mm/sec.) in the equation above. Then, classify the obtained value of “S” into three cases, 1) S < 100, 2) 100 ≤ S ≤ 500, and 3) S > 500. For Case 3) S > 500, recalculate by substituting the value K = 1,600 (mm/sec.). After that, classify the calculation result into two cases, 4) S ≤ 500 and 5) S > 500. For details, refer to the instruction manual enclosed with this product. For calculating “Tm” (maximum halt time of the machinery), use a special device called a “brake monitor”.
When this device is used in the “PSDI mode”, an appropriate safety distance “S” must be calculated. For details, be sure to refer to the standards or regulations applicable in each region or country.

<In the case that the minimum sensing object is ø40 mm ø1.575 in or more>

• Equation $S = K \times T + C$
S: Safety distance (mm)
K: Intrusion velocity of operator’s body or object (mm/sec.)
Taken as 1,600 (mm/sec.) for calculation
T: Response time of total equipment (sec.)
$T = T_m + T_{SF4B}$
T_m: Maximum halting time of machinery (sec.)
T_{SF4B}: Response time of the **SF4B<V2>** series (sec.)
C: Additional distance calculated from the size of the minimum sensing object of the light curtain (mm)
C = 850 (mm) (Constant)

For use in the United States of America (as per ANSI B11.19)

• Equation ② $S = K \times (T_S + T_C + T_{SF4B} + T_{bm}) + D_{pf}$
S: Safety distance (mm)
Minimum required distance between the sensing area surface and the dangerous parts of the machine
K: Intrusion velocity {Recommended value in OSHA is 63 (inch/sec.) ≈ 1,600 (mm/sec.)}
ANSI B11.19 does not define the intrusion velocity “K”. When determining “K”, consider possible factors including physical ability of operators.
T_S: Halting time calculated from the operation time of the control element (air valve, etc.) (sec.)
T_C: Maximum response time of the control circuit required for functioning the brake (sec.)
T_{SF4B}: Response time of light curtain (sec.)
T_{bm}: Additional halting time tolerance for the brake monitor (sec.)
The following equation holds when the machine is equipped with a brake monitor.
$T_{bm} = T_a - (T_s + T_c)$
T_a: Setting time of brake monitor (sec.)
When the machine is not equipped with a brake monitor, it is recommended that 20 % or more of (Ts + Tc) is taken as additional halting time.
D_{pf}: Additional distance calculated from the size of the minimum sensing of the
SF4B-F□(G)<V2>: D_{pf} = 23.8 mm 0.937 in
SF4B-H□(G)<V2>: D_{pf} = 61.2 mm 2.409 in
SF4B-A□(G)<V2>: D_{pf} = 129.2 mm 5.087 in

$D_{pf} = 3.4 \times (d - 0.276)$ (inch)
$\approx 3.4 \times (d - 7)$ (mm)
d: Minimum sensing object diameter 0.552 (inch) ≈ 14 (mm) **SF4B-F□(G)<V2>**
Minimum sensing object diameter 0.985 (inch) ≈ 25 (mm) **SF4B-H□(G)<V2>**
Minimum sensing object diameter 1.772 (inch) ≈ 45 (mm) **SF4B-A□(G)<V2>**

Output waveform [Control outputs (OSSD 1, OSSD 2) ON]

• Refer to the **SF4B<V2>** manual for details.

Influence of reflective surfaces

• Refer to the **SF4B<V2>** manual for details.

Handy-controller

This device enables to set each function using the handy-controller **SFB-HC** (optional). (However, a handy-controller cannot be used with the **SF4B-□-01<V2>**, the **SF4B-□-03<V2>** and the **SF-C14EX-01**.) Among the functions, the contents related to the safety distance such as the size of the minimum sensing object and response time are varied depending on the setting condition. When setting each function, re-calculate the safety distance, and make enough space larger than the calculated safety distance. Failure to do so might cause the accident that the device cannot stop quickly before reaching the dangerous area of the machinery, resulting in the serious injury or death.

• Refer to the instruction manual enclosed with the handy-controller for details of the function settings for using handy-controller **SFB-HC** (optional).

Troubleshooting

• Refer to the **SF4B<V2>** manual for details.

Corner mirror

• Be sure to carry out maintenance while referring to the instruction manual for the **SF4B** series of light curtains.
• Do not use if dirt, water, or oil, etc. is attached to the reflective surface of this product. Appropriate sensing range may not be maintained due to diffusion or refraction.
• Make sure that you have read the instruction manual for the corner mirror thoroughly before setting up the corner mirrors and light curtains, and follow the instructions given. If the equipment is not set up correctly as stipulated in the instruction manual, incident light errors may result in unexpected situations which may result in serious injury or death.
• Please download the instruction manuals from our website.
• Light curtain **SF4B** series cannot be used as a retroreflective type. Avoid installing the light curtain as a retroreflective type when this product is applied.
• The mirror part of this product is made of glass. Note that if it is broken, the glass shards may fly apart.
• Do not use if crack or breakage appears on the reflective surface of this product. Proper sensing range may not be maintained due to diffusion or refraction.
If crack or breakage appears on the reflective surface of this product, replace the product.
• When adjusting beam channels with a laser alignment tool, etc., take sufficient care that the laser beam reflected by this product does not enter the eyes.
• Failure to follow the above items may result in death or serious injury.

DIMENSIONS (Unit: mm in)

The CAD data in the dimensions can be downloaded from our website.

SF4B-□<V2> Not available for the robust type **SF4B-□G<V2>** Light curtain

Assembly dimensions

Mounting drawing for the light curtains using the standard mounting brackets **MS-SFB-1** (optional) and the intermediate supporting brackets.

<Rear mounting> **<Side mounting>**

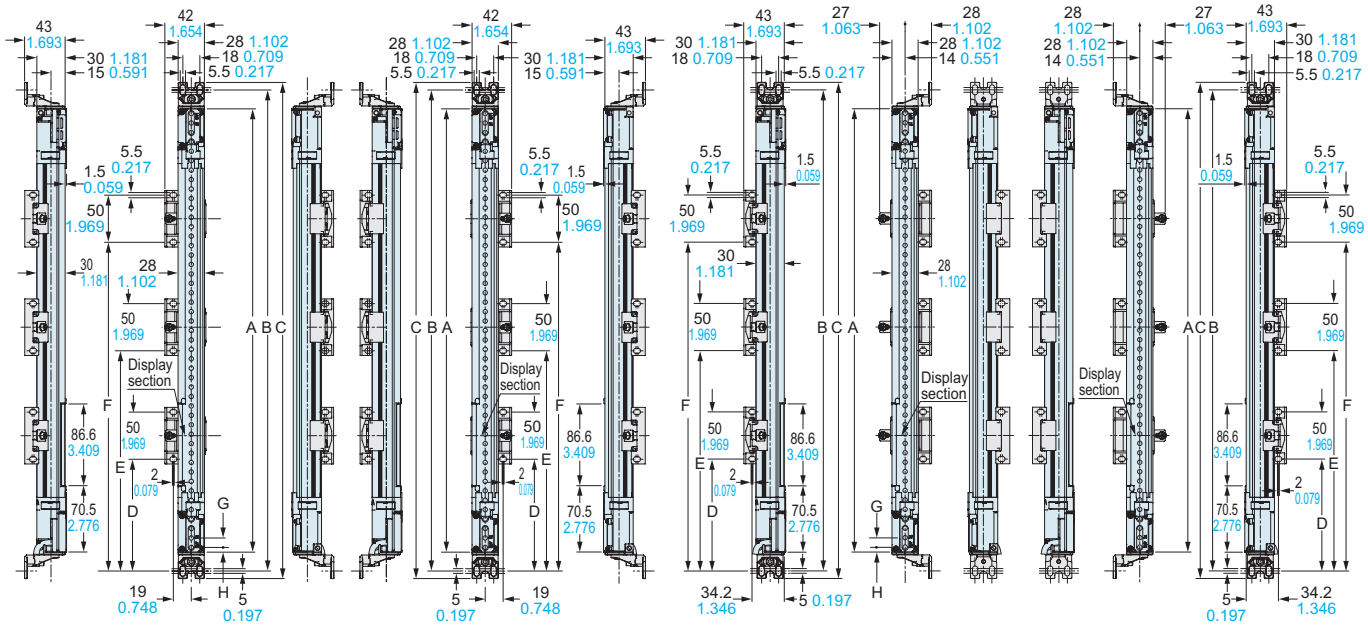

Model No.			Protective height (Main body length)	Mounting pitch	Total length	Intermediate supporting bracket mounting pitch		
			A	B	C	D	E	F
SF4B-F23□<V2>	SF4B-H12□<V2>	SF4B-A6□<V2>	230 9.055	270 10.630	286 11.260	—	—	—
SF4B-F31□<V2>	SF4B-H16□<V2>	SF4B-A8□<V2>	310 12.205	350 13.780	366 14.406	—	—	—
SF4B-F39□<V2>	SF4B-H20□<V2>	SF4B-A10□<V2>	390 15.354	430 16.929	446 17.559	—	—	—
SF4B-F47□<V2>	SF4B-H24□<V2>	SF4B-A12□<V2>	470 18.504	510 20.079	526 20.709	—	—	—
SF4B-F55□<V2>	SF4B-H28□<V2>	SF4B-A14□<V2>	550 21.654	590 23.228	606 23.858	—	—	—
SF4B-F63□<V2>	SF4B-H32□<V2>	SF4B-A16□<V2>	630 24.803	670 26.378	686 27.008	—	—	—
SF4B-F71□<V2>	SF4B-H36□<V2>	SF4B-A18□<V2>	710 27.953	750 29.528	766 30.157	—	—	—
SF4B-F79□<V2>	SF4B-H40□<V2>	SF4B-A20□<V2>	790 31.102	830 32.677	846 33.307	390 15.354	—	—
SF4B-F95□<V2>	SF4B-H48□<V2>	SF4B-A24□<V2>	950 37.402	990 38.976	1,006 39.606	470 18.504	—	—
SF4B-F111□<V2>	SF4B-H56□<V2>	SF4B-A28□<V2>	1,110 43.701	1,150 45.276	1,166 45.905	550 21.654	—	—
SF4B-F127□<V2>	SF4B-H64□<V2>	SF4B-A32□<V2>	1,270 50.000	1,310 51.575	1,326 52.505	418 16.457	842 33.150	—
———	SF4B-H72□<V2>	SF4B-A36□<V2>	1,430 56.299	1,470 57.874	1,486 58.504	472 18.583	948 37.323	—
———	SF4B-H80□<V2>	SF4B-A40□<V2>	1,590 62.598	1,630 64.173	1,646 64.803	525 20.669	1,055 41.535	—
———	SF4B-H88□<V2>	SF4B-A44□<V2>	1,750 68.898	1,790 70.472	1,806 71.102	433 17.047	870 34.252	1,308 51.496
———	SF4B-H96□<V2>	SF4B-A48□<V2>	1,910 75.197	1,950 76.772	1,966 77.401	473 18.622	950 37.402	1,428 56.220

Model No.	Beam pitch	First beam channel position
	G	H
SF4B-F□<V2>	10 0.394	5 0.197
SF4B-H□<V2>	20 0.787	5 0.197
SF4B-A□<V2>	40 1.575	15 0.591

DIMENSIONS (Unit: mm in)

The CAD data in the dimensions can be downloaded from our website.

SF4B-□<V2> Not available for the robust type **SF4B-□G<V2>** Light curtain

Assembly dimensions

Mounting drawing for the light curtains using the dead zoneless brackets **MS-SFB-3** (optional) and the intermediate supporting brackets.

<Rear mounting>

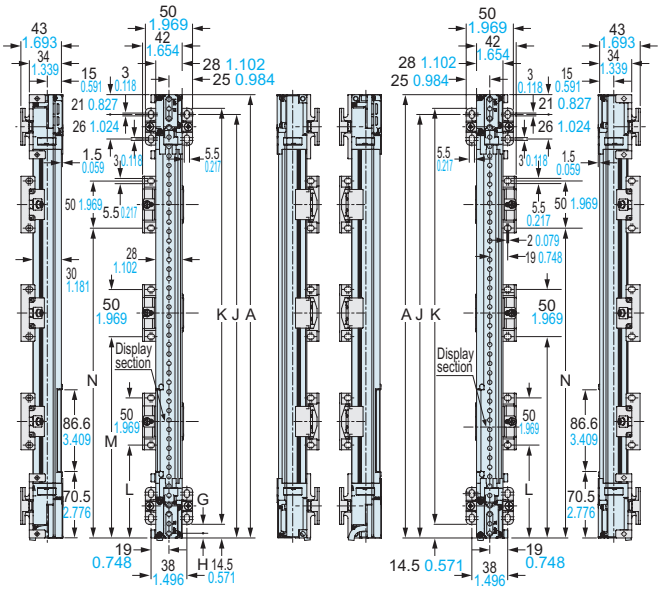

<Side mounting>

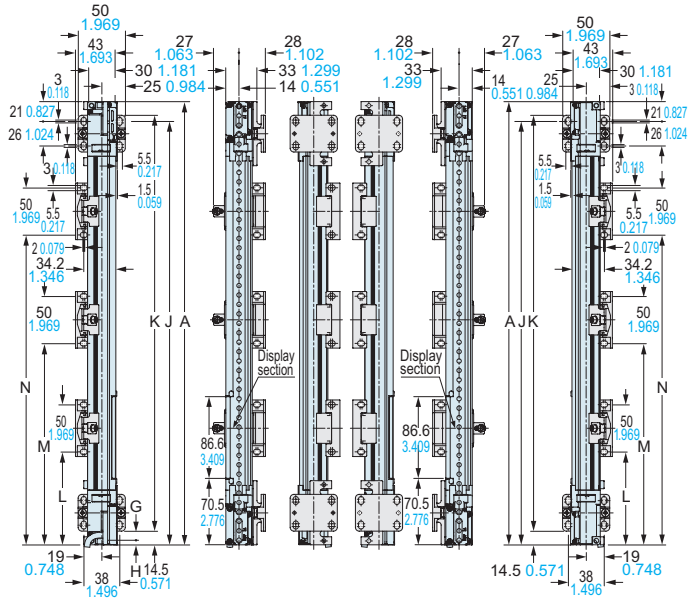

Model No.			Protective height (Main body length)	MS-SFB-3 Mounting pitch		Intermediate supporting bracket mounting pitch		
			A	J	K	L	M	N
SF4B-F23□<V2>	SF4B-H12□<V2>	SF4B-A6□<V2>	230 9.055	209 8.228	201 7.913	—	—	—
SF4B-F31□<V2>	SF4B-H16□<V2>	SF4B-A8□<V2>	310 12.205	289 11.378	281 11.063	—	—	—
SF4B-F39□<V2>	SF4B-H20□<V2>	SF4B-A10□<V2>	390 15.354	369 14.528	361 14.213	—	—	—
SF4B-F47□<V2>	SF4B-H24□<V2>	SF4B-A12□<V2>	470 18.504	449 17.677	441 17.362	—	—	—
SF4B-F55□<V2>	SF4B-H28□<V2>	SF4B-A14□<V2>	550 21.654	529 20.827	521 20.512	—	—	—
SF4B-F63□<V2>	SF4B-H32□<V2>	SF4B-A16□<V2>	630 24.803	609 23.976	601 23.661	—	—	—
SF4B-F71□<V2>	SF4B-H36□<V2>	SF4B-A18□<V2>	710 27.953	689 27.126	681 26.811	—	—	—
SF4B-F79□<V2>	SF4B-H40□<V2>	SF4B-A20□<V2>	790 31.102	769 30.276	761 29.961	370 14.567	—	—
SF4B-F95□<V2>	SF4B-H48□<V2>	SF4B-A24□<V2>	950 37.402	929 36.575	921 36.260	450 17.717	—	—
SF4B-F111□<V2>	SF4B-H56□<V2>	SF4B-A28□<V2>	1,110 43.701	1,089 42.874	1,081 42.559	530 20.866	—	—
SF4B-F127□<V2>	SF4B-H64□<V2>	SF4B-A32□<V2>	1,270 50.000	1,249 49.173	1,241 48.858	398 15.669	822 32.362	—
———	SF4B-H72□<V2>	SF4B-A36□<V2>	1,430 56.299	1,409 55.472	1,401 55.157	452 17.795	928 36.535	—
———	SF4B-H80□<V2>	SF4B-A40□<V2>	1,590 62.598	1,569 61.772	1,561 61.457	505 19.882	1,035 40.748	—
———	SF4B-H88□<V2>	SF4B-A44□<V2>	1,750 68.898	1,729 68.071	1,721 67.756	413 16.260	850 33.465	1,288 50.709
———	SF4B-H96□<V2>	SF4B-A48□<V2>	1,910 75.197	1,889 74.370	1,881 74.055	453 17.835	930 36.614	1,408 55.433

Model No.	Beam pitch	First beam channel position
	G	H
SF4B-F□<V2>	10 0.394	5 0.197
SF4B-H□<V2>	20 0.787	5 0.197
SF4B-A□<V2>	40 1.575	15 0.591

DIMENSIONS (Unit: mm in)

The CAD data in the dimensions can be downloaded from our website.

SF4B-□G<V2> Not available for the robust type **SF4B-□G<V2>** Light curtain

Assembly dimensions

Mounting drawing for light curtains using the standard mounting brackets **MS-SF4BG-1** (optional) and the intermediate supporting brackets.

<Rear mounting> **<Side mounting>**

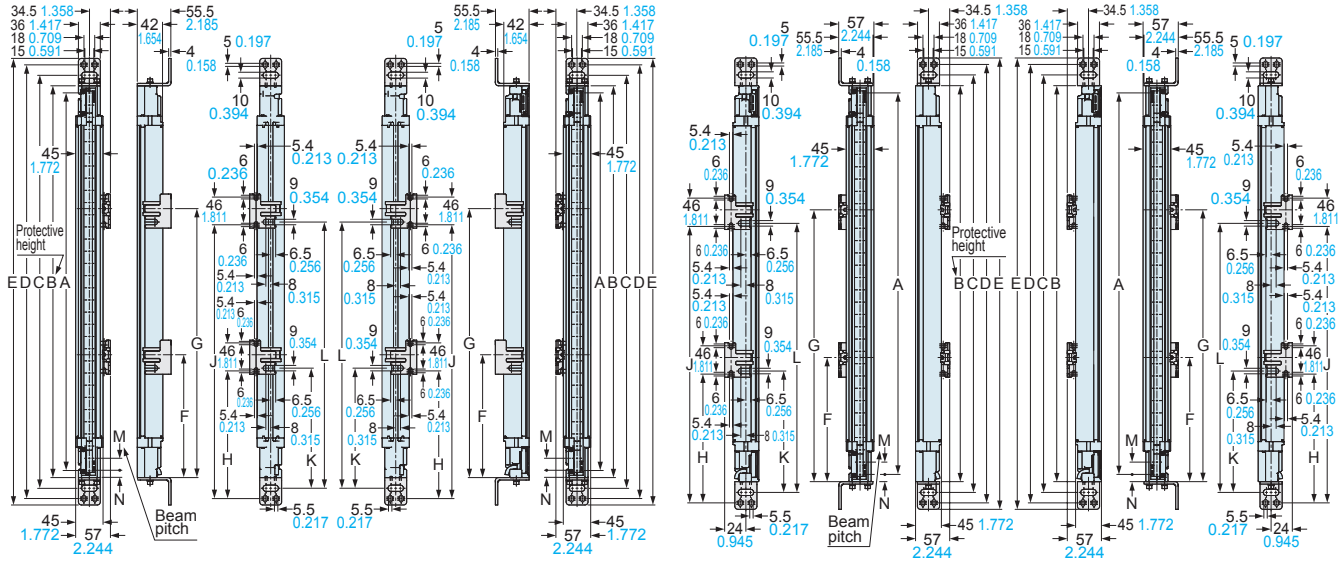

Model No.			Distance between beam axes (Top / Bottom channels) A		Protective height (Main body length) B	Mounting pitch C	Mounting pitch D	Total length E	Intermediate supporting bracket mounting pitch F	G	H	J	K	L
			SF4B-F□G<V2> SF4B-H□G<V2>	SF4B-A□G<V2>										
SF4B-F23G<V2>	SF4B-H12G<V2>	SF4B-A6G<V2>	220 8.661	200 7.874	244 9.606	279 10.984	313 12.323	334 13.150	—	—	—	—	—	—
SF4B-F31G<V2>	SF4B-H16G<V2>	SF4B-A8G<V2>	300 11.811	280 11.024	324 12.756	359 14.134	393 15.472	414 16.299	—	—	—	—	—	—
SF4B-F39G<V2>	SF4B-H20G<V2>	SF4B-A10G<V2>	380 14.961	360 14.173	404 15.906	439 17.283	473 18.622	494 19.449	—	—	—	—	—	—
SF4B-F47G<V2>	SF4B-H24G<V2>	SF4B-A12G<V2>	460 18.110	440 17.323	484 19.055	519 20.433	553 21.772	574 22.598	—	—	—	—	—	—
SF4B-F55G<V2>	SF4B-H28G<V2>	SF4B-A14G<V2>	540 21.260	520 20.472	564 22.205	599 23.583	633 24.921	654 25.748	—	—	—	—	—	—
SF4B-F63G<V2>	SF4B-H32G<V2>	SF4B-A16G<V2>	620 24.409	600 23.622	644 25.354	679 26.732	713 28.071	734 28.898	—	—	—	—	—	—
SF4B-F71G<V2>	SF4B-H36G<V2>	SF4B-A18G<V2>	700 27.559	680 26.772	724 28.504	759 29.882	793 31.220	814 32.047	—	—	—	—	—	—
SF4B-F79G<V2>	SF4B-H40G<V2>	SF4B-A20G<V2>	780 30.709	760 29.921	804 31.654	839 33.031	873 34.370	894 35.197	441 17.362	—	414 16.299	—	419 16.496	—
SF4B-F95G<V2>	SF4B-H48G<V2>	SF4B-A24G<V2>	940 37.008	920 36.220	964 37.953	999 39.331	1,033 40.669	1,054 41.496	521 20.512	—	494 19.449	—	499 19.646	—
SF4B-F111G<V2>	SF4B-H56G<V2>	SF4B-A28G<V2>	1,100 43.307	1,080 42.520	1,124 44.252	1,159 45.630	1,193 46.968	1,214 47.795	601 23.661	—	574 22.598	—	579 22.795	—
SF4B-F127G<V2>	SF4B-H64G<V2>	SF4B-A32G<V2>	1,260 49.606	1,240 48.819	1,284 50.551	1,319 51.929	1,353 53.268	1,374 54.094	681 26.811	—	654 25.748	—	659 25.945	—
—	SF4B-H72G<V2>	SF4B-A36G<V2>	1,420 55.905	1,400 55.118	1,444 56.850	1,479 58.228	1,513 59.567	1,534 60.394	520 20.472	1,001 39.409	493 19.409	974 38.346	498 19.606	979 38.543
—	SF4B-H80G<V2>	SF4B-A40G<V2>	1,580 62.205	1,560 61.417	1,604 63.150	1,639 64.528	1,673 65.866	1,694 66.693	573 22.559	1,108 43.622	546 21.496	1,081 42.559	551 21.693	1,086 42.756
—	SF4B-H88G<V2>	SF4B-A44G<V2>	1,740 68.504	1,720 67.716	1,764 69.449	1,799 70.827	1,833 72.165	1,854 72.992	627 24.685	1,215 47.835	600 23.622	1,188 46.772	605 23.819	1,193 46.968
—	SF4B-H96G<V2>	SF4B-A48G<V2>	1,900 74.803	1,880 74.016	1,924 75.748	1,959 77.126	1,993 78.464	2,014 79.291	680 26.772	1,321 52.008	653 25.709	1,294 50.945	658 25.906	1,289 50.748

Model No.	Beam pitch	First beam channel position
	M	N
SF4B-F□G<V2>	10 0.394	11.8 0.465
SF4B-H□G<V2>	20 0.787	11.8 0.465
SF4B-A□G<V2>	40 1.575	21.8 0.858

DIMENSIONS (Unit: mm in)

The CAD data in the dimensions can be downloaded from our website.

SF4B-□G<V2> Not available for the robust type **SF4B-□G<V2>** Light curtain

Assembly dimensions

Mounting drawing for light curtains using the Dead zoneless mounting brackets **MS-SF4B-3** (optional) and the intermediate supporting brackets.

<Rear mounting> **<Side mounting>**

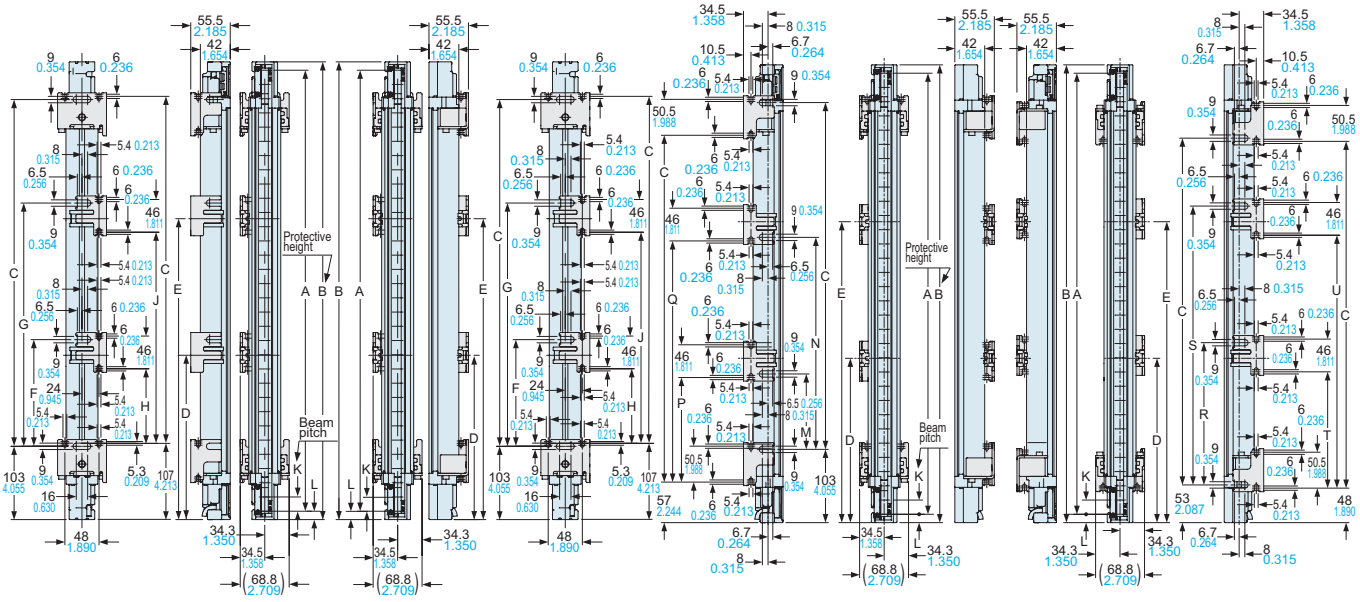

Model No.			Distance between beam axes (Top / Bottom channels) A		Protective height (Main body length) B	Mounting pitch C	Intermediate supporting bracket mounting pitch												
			SF4B-F□G<V2> SF4B-H□G<V2>	SF4B-A□G<V2>			D	E	F	G	H	J	M	N	P	Q	R	S	T	U
SF4B-F23G<V2>	SF4B-H12G<V2>	SF4B-A6G<V2>	220 8.661	200 7.874	244 9.606	64.5 2.539	—	—	—	—	—	—	—	—	—	—	—	—	—	—
SF4B-F31G<V2>	SF4B-H16G<V2>	SF4B-A8G<V2>	300 11.811	280 11.024	324 12.756	144.5 5.689	—	—	—	—	—	—	—	—	—	—	—	—	—	—
SF4B-F39G<V2>	SF4B-H20G<V2>	SF4B-A10G<V2>	380 14.961	360 14.173	404 15.906	224.5 8.839	—	—	—	—	—	—	—	—	—	—	—	—	—	—
SF4B-F47G<V2>	SF4B-H24G<V2>	SF4B-A12G<V2>	460 18.110	440 17.323	484 19.055	304.5 11.988	—	—	—	—	—	—	—	—	—	—	—	—	—	—
SF4B-F55G<V2>	SF4B-H28G<V2>	SF4B-A14G<V2>	540 21.260	520 20.472	564 22.205	384.5 15.138	—	—	—	—	—	—	—	—	—	—	—	—	—	—
SF4B-F63G<V2>	SF4B-H32G<V2>	SF4B-A16G<V2>	620 24.409	600 23.622	644 25.354	464.5 18.287	—	—	—	—	—	—	—	—	—	—	—	—	—	—
SF4B-F71G<V2>	SF4B-H36G<V2>	SF4B-A18G<V2>	700 27.559	680 26.772	724 28.504	544.5 21.437	—	—	—	—	—	—	—	—	—	—	—	—	—	—
SF4B-F79G<V2>	SF4B-H40G<V2>	SF4B-A20G<V2>	780 30.709	760 29.921	804 31.654	624.5 24.587	414 16.299	—	333 13.110	—	288 11.339	—	289 11.378	—	330 12.992	—	383 15.079	—	347 13.661	—
SF4B-F95G<V2>	SF4B-H48G<V2>	SF4B-A24G<V2>	940 37.008	920 36.220	964 37.953	784.5 30.886	494 19.449	—	413 16.260	—	368 14.488	—	369 14.528	—	410 16.142	—	463 18.228	—	427 16.811	—
SF4B-F111G<V2>	SF4B-H56G<V2>	SF4B-A28G<V2>	1,100 43.307	1,080 42.520	1,124 44.252	944.5 37.185	574 22.598	—	493 19.409	—	448 17.638	—	449 17.677	—	490 19.291	—	543 21.378	—	507 19.961	—
SF4B-F127G<V2>	SF4B-H64G<V2>	SF4B-A32G<V2>	1,260 49.606	1,240 48.819	1,284 50.551	1,104.5 43.484	654 25.748	—	573 22.559	—	528 20.787	—	529 20.827	—	570 22.441	—	623 24.528	—	587 23.110	—
—	SF4B-H72G<V2>	SF4B-A36G<V2>	1,420 55.905	1,400 55.118	1,444 56.850	1,264.5 49.783	493 19.409	974 38.346	412 16.220	893 35.157	367 14.449	848 33.386	368 14.488	849 33.425	409 16.102	890 35.039	462 18.189	943 37.126	426 16.772	907 35.709
—	SF4B-H80G<V2>	SF4B-A40G<V2>	1,580 62.205	1,560 61.417	1,604 63.150	1,424.5 56.083	546 21.496	1,081 42.559	465 18.307	1,000 39.370	420 16.535	955 37.598	421 16.575	956 37.638	462 18.189	997 39.252	515 20.276	1,060 41.339	479 18.858	1,014 39.921
—	SF4B-H88G<V2>	SF4B-A44G<V2>	1,740 68.504	1,720 67.716	1,764 69.449	1,584.5 62.382	600 23.622	1,188 46.772	519 20.433	1,107 43.583	474 18.661	1,062 41.811	475 18.701	1,063 41.850	516 20.315	1,104 43.465	569 22.402	1,157 45.551	533 20.984	1,121 44.134
—	SF4B-H96G<V2>	SF4B-A48G<V2>	1,900 74.803	1,880 74.016	1,924 75.748	1,744.5 68.681	653 25.709	1,294 50.945	572 22.520	1,213 47.756	527 20.748	1,168 45.984	528 20.787	1,169 46.024	569 22.402	1,210 47.638	622 24.488	1,263 49.724	586 23.071	1,227 48.307

Model No.	Beam pitch	First beam channel position
	K	L
SF4B-F□G<V2>	10 0.394	11.8 0.465
SF4B-H□G<V2>	20 0.787	11.8 0.465
SF4B-A□G<V2>	40 1.575	21.8 0.858

DIMENSIONS (Unit: mm in)

The CAD data in the dimensions can be downloaded from our website.

SF4B-□ Not available for the robust type **SF4B-□G<V2>** Light curtain

Protection bar set MC-SFBH-□ assembly dimensions

Mounting drawing for the light curtain on which the front protection unit (**MC-SFBH-□**) is mounted.

MC-SFBH-□(L) **MC-SFBH-□(R)**

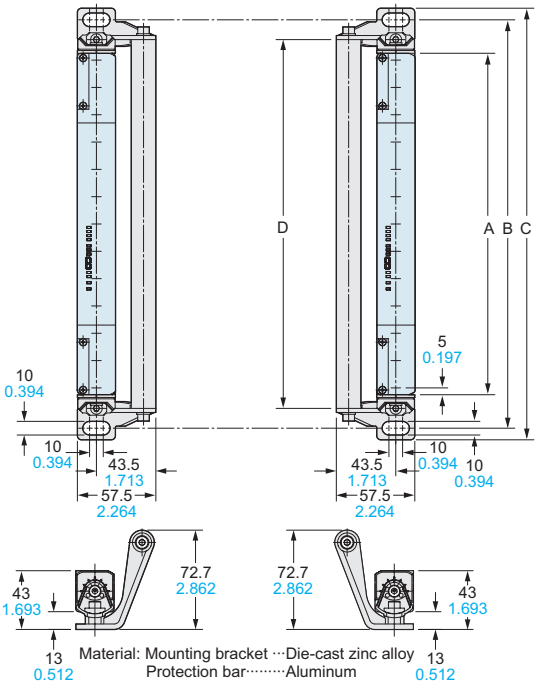

Material: Mounting bracket ···Die-cast zinc alloy
Protection bar·····Aluminum

Two brackets (one pc. each of R type and L type), one protection bar
Two pcs. each of M5 (length 16 mm 0.630 in) hexagon-socket-head bolts, M5 (length 20 mm 0.787 in) hexagon-socket-head bolt are attached.

Model No.	Applicable light curtain model No.			A	B	C	D
MC-SFBH-12(-T)	SF4B-F23□<V2>	SF4B-H12□<V2>	SF4B-A6□<V2>	230 9.055	279 10.984	296 11.654	250 9.843
MC-SFBH-16(-T)	SF4B-F31□<V2>	SF4B-H16□<V2>	SF4B-A8□<V2>	310 12.205	359 14.134	376 14.803	330 12.992
MC-SFBH-20(-T)	SF4B-F39□<V2>	SF4B-H20□<V2>	SF4B-A10□<V2>	390 15.354	439 17.283	456 17.953	410 16.142
MC-SFBH-24(-T)	SF4B-F47□<V2>	SF4B-H24□<V2>	SF4B-A12□<V2>	470 18.504	519 20.433	536 21.102	490 19.291
MC-SFBH-28(-T)	SF4B-F55□<V2>	SF4B-H28□<V2>	SF4B-A14□<V2>	550 21.654	599 23.583	616 24.252	570 22.441
MC-SFBH-32(-T)	SF4B-F63□<V2>	SF4B-H32□<V2>	SF4B-A16□<V2>	630 24.803	679 26.732	696 27.402	650 25.591
MC-SFBH-36(-T)	SF4B-F71□<V2>	SF4B-H36□<V2>	SF4B-A18□<V2>	710 27.953	759 29.882	776 30.551	730 28.740
MC-SFBH-40(-T)	SF4B-F79□<V2>	SF4B-H40□<V2>	SF4B-A20□<V2>	790 31.102	839 33.031	856 33.701	810 31.890
MC-SFBH-48(-T)	SF4B-F95□<V2>	SF4B-H48□<V2>	SF4B-A24□<V2>	950 37.402	999 39.331	1,016 40.000	970 38.189
MC-SFBH-56(-T)	SF4B-F111□<V2>	SF4B-H56□<V2>	SF4B-A28□<V2>	1,110 43.701	1,159 45.630	1,176 46.299	1,130 44.488
MC-SFBH-64(-T)	SF4B-F127□<V2>	SF4B-H64□<V2>	SF4B-A32□<V2>	1,270 50.000	1,319 51.929	1,336 52.598	1,290 50.787
MC-SFBH-72(-T)	——	SF4B-H72□<V2>	SF4B-A36□<V2>	1,430 56.299	1,479 58.228	1,496 58.898	1,450 57.087
MC-SFBH-80(-T)	——	SF4B-H80□<V2>	SF4B-A40□<V2>	1,590 62.598	1,639 64.527	1,656 65.197	1,610 63.386
MC-SFBH-88(-T)	——	SF4B-H88□<V2>	SF4B-A44□<V2>	1,750 68.898	1,799 70.827	1,816 71.496	1,770 69.685
MC-SFBH-96(-T)	——	SF4B-H96□<V2>	SF4B-A48□<V2>	1,910 75.197	1,959 77.126	1,976 77.795	1,930 75.984

Protection bar set for rear / side mounting MC-SFBH-□-T assembly dimensions

Mounting drawing for the light curtain on which the front protection unit (**MC-SFBH-□-T**) is mounted.

Rear mounting

MC-SFBH-□-T(L) **MC-SFBH-□-T(R)**

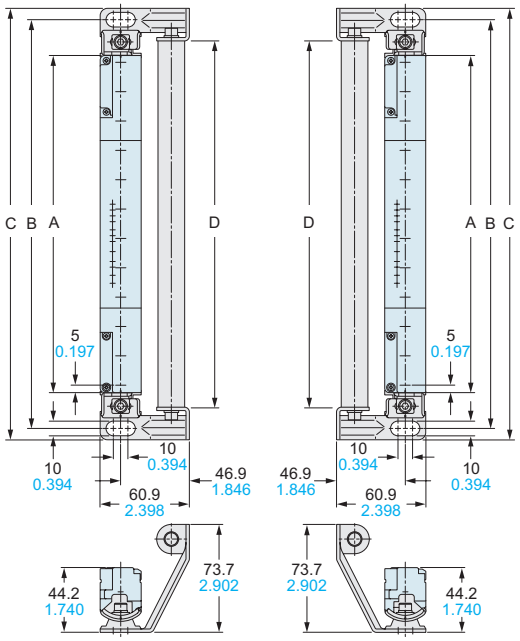

Side mounting

MC-SFBH-□-T(L) **MC-SFBH-□-T(R)**

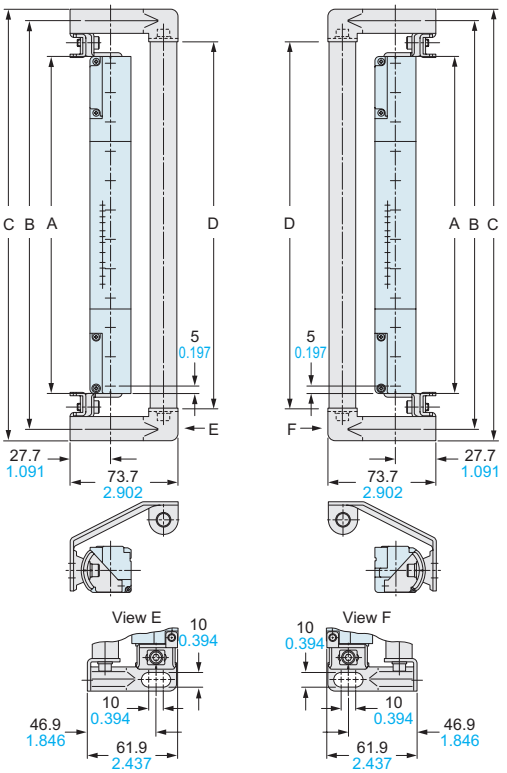

Material: Mounting bracket ···Iron (Trivalent chrome plated)
Protection bar·····Aluminum

Two brackets (one pc. each of R type and L type), one protection bar
Two pcs. each of M5 (length 18 mm 0.709 in) hexagon-socket-head bolts, M5 (length 20 mm 0.787 in) hexagon-socket-head bolt are attached.

DIMENSIONS (Unit: mm in)

The CAD data in the dimensions can be downloaded from our website.

RF-SFBH-□

Corner mirror (Optional)

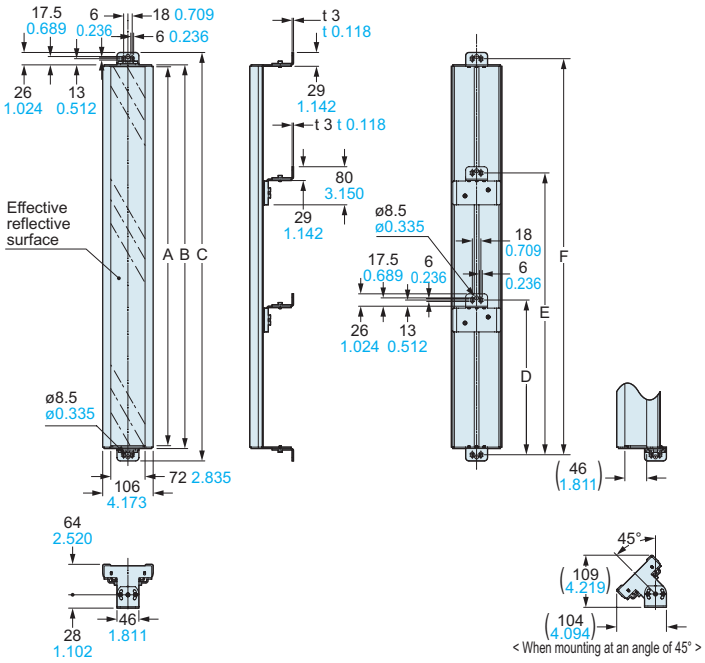

Model No.	A	B	C	D	E	F	Net weight
RF-SFBH-12	236 9.291	246 9.685	298 11.732	—	—	272 10.709	970 g approx.
RF-SFBH-16	316 12.441	326 12.835	378 14.882	—	—	352 13.858	1,170 g approx.
RF-SFBH-20	396 15.591	406 15.984	458 18.031	—	—	432 17.008	1,370 g approx.
RF-SFBH-24	476 18.740	486 19.134	538 21.181	—	—	512 20.157	1,570 g approx.
RF-SFBH-28	556 21.890	566 22.283	618 24.331	—	—	592 23.307	1,770 g approx.
RF-SFBH-32	636 25.039	646 25.433	698 27.480	—	—	672 26.457	1,970 g approx.
RF-SFBH-36	716 28.189	726 28.583	778 30.630	—	—	752 29.606	2,170 g approx.
RF-SFBH-40	796 31.339	806 31.732	858 33.779	458 ±50 18.031 ±1.969	—	832 32.756	2,660 g approx.
RF-SFBH-48	956 37.638	966 38.031	1,018 40.079	538 ±50 21.181 ±1.969	—	992 39.055	3,060 g approx.
RF-SFBH-56	1,116 43.937	1,126 44.331	1,178 46.378	618 ±50 24.331 ±1.969	—	1,152 45.354	3,460 g approx.
RF-SFBH-64	1,276 50.236	1,286 50.630	1,338 52.677	698 ±50 27.480 ±1.969	—	1,312 51.653	3,890 g approx.
RF-SFBH-72	1,436 56.535	1,446 56.929	1,498 58.976	538 ±50 21.181 ±1.969	1,018 ±50 40.079 ±1.969	1,472 57.953	4,550 g approx.
RF-SFBH-80	1,596 62.835	1,606 63.228	1,658 65.275	591 ±50 23.268 ±1.969	1,125 ±50 44.291 ±1.969	1,632 64.252	4,950 g approx.
RF-SFBH-88	1,756 69.134	1,766 69.527	1,818 71.575	645 ±50 25.394 ±1.969	1,231 ±50 48.464 ±1.969	1,792 70.551	5,350 g approx.
RF-SFBH-96	1,916 75.433	1,926 75.827	1,978 77.874	698 ±50 27.480 ±1.969	1,338 ±50 52.677 ±1.969	1,952 76.850	5,750 g approx.

MS-SFB-1

Standard mounting bracket (Optional)

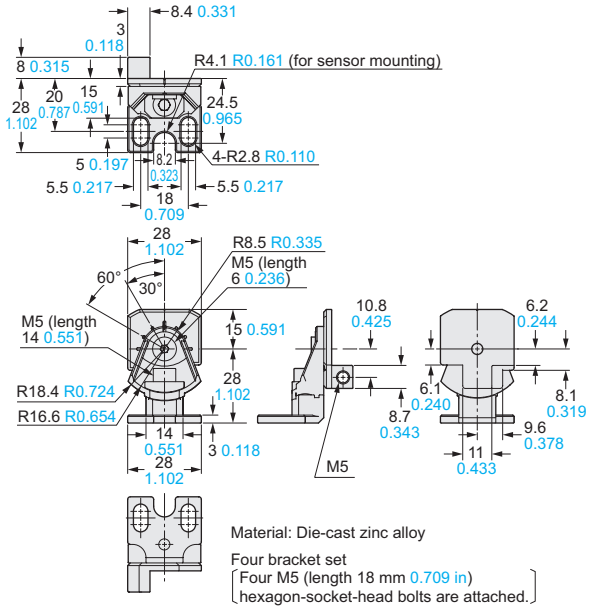

Material: Die-cast zinc alloy

Four bracket set
[Four M5 (length 18 mm 0.709 in) hexagon-socket-head bolts are attached.]

It is not available for the robust type **SF4B-□G<V2>**.

MS-SFB-1-T

M8 mounting bracket (Optional)

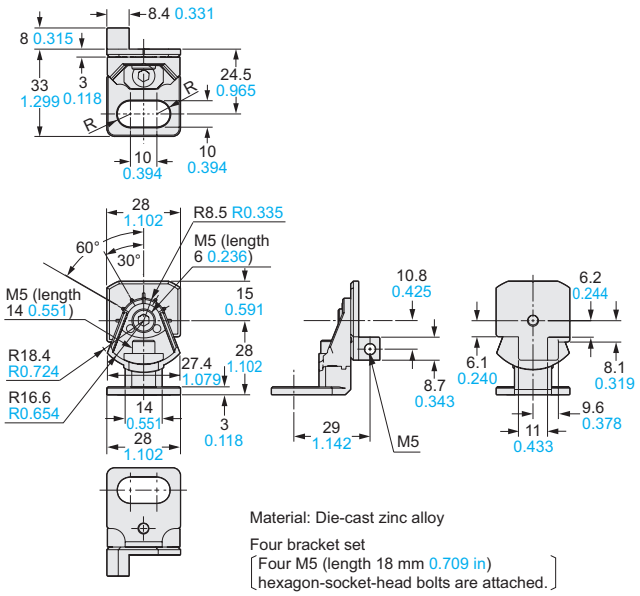

Material: Die-cast zinc alloy

Four bracket set
[Four M5 (length 18 mm 0.709 in) hexagon-socket-head bolts are attached.]

It is not available for the robust type **SF4B-□G<V2>**.

MS-SFBG-1

Standard L mounting bracket (Optional)

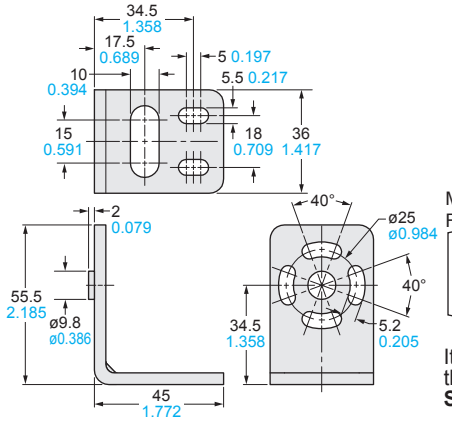

Material: SPCC

Four bracket set
[Eight M5 (length: 10 mm 0.394 in) hexagon-socket-head bolts are attached.]

It is only available for the robust **SF4B-□G<V2>**.

DIMENSIONS (Unit: mm in)

The CAD data in the dimensions can be downloaded from our website.

MS-SFB-2

Not available for the robust type **SF4B-□G<V2>**

Intermediate supporting bracket (Accessory for light curtain)

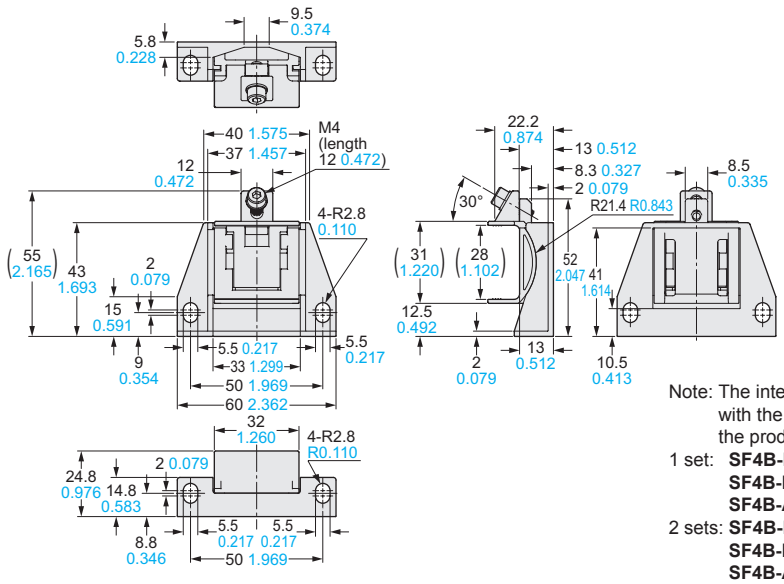

Material: Die-cast zinc alloy

Note: The intermediate supporting bracket (**MS-SFB-2**) is enclosed with the following products. The quantity differs depending on the product as shown below:

1 set: **SF4B-F□<V2>** … Light curtain with 79 to 111 beam channels
SF4B-H□<V2> … Light curtain with 40 to 56 beam channels
SF4B-A□<V2> … Light curtain with 20 to 28 beam channels

2 sets: **SF4B-F127<V2>**
SF4B-H□<V2> … Light curtain with 64 to 80 beam channels
SF4B-A□<V2> … Light curtain with 32 to 40 beam channels

3 sets: **SF4B-H□<V2>** … Light curtain with 88 to 96 beam channels
SF4B-A□<V2> … Light curtain with 44 to 48 beam channels

MS-SF4BG-2

Intermediate supporting bracket (Accessory for light curtain)

Rear mounting

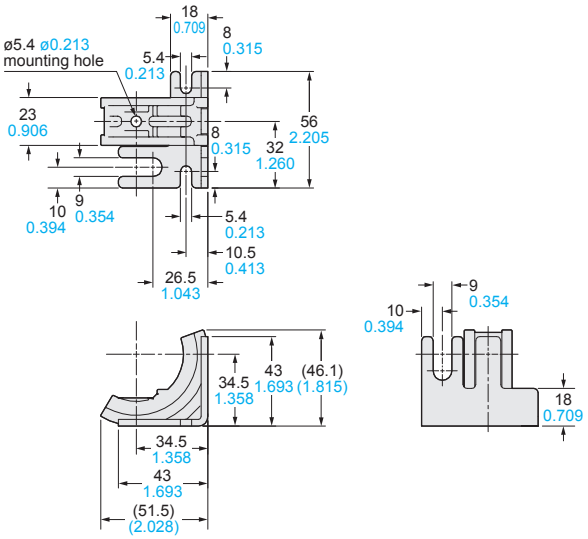

Side mounting

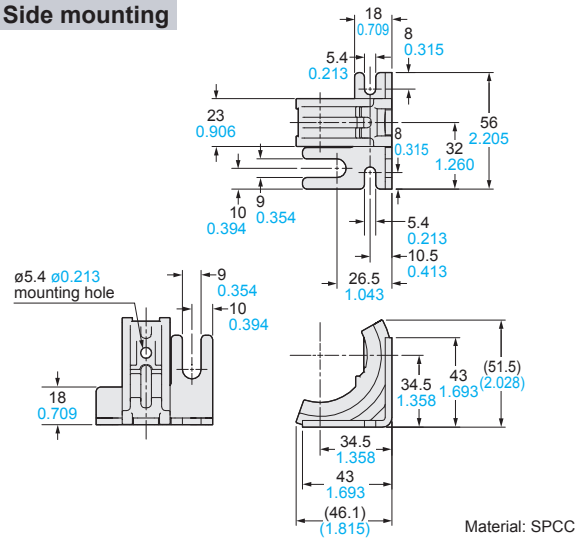

Material: SPCC

Note: The intermediate supporting bracket **MS-SF4BG-2** is enclosed with the following products. The quantity differs depending on the product as shown below:

1 set: **SF4B-F□G<V2>** … Light curtain with 79 to 127 beam channels
SF4B-H□G<V2> … Light curtain with 40 to 64 beam channels
SF4B-A□G<V2> … Light curtain with 20 to 32 beam channels

2 sets: **SF4B-H□G<V2>** … Light curtain with 72 to 96 beam channels
SF4B-A□G<V2> … Light curtain with 36 to 48 beam channels

DIMENSIONS (Unit: mm in)

The CAD data in the dimensions can be downloaded from our website.

MS-SFB-3

Not available for the robust type **SF4B-□G<V2>**

Dead zoneless mounting bracket (Optional)

Main body

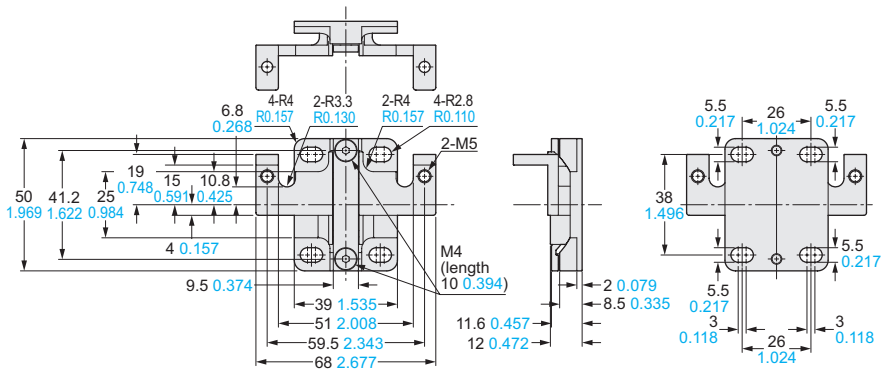

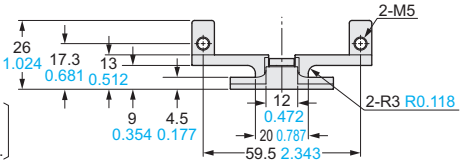

Material: Die-cast zinc alloy

Four bracket set
(Four M5 (length 25 mm 0.984 in) hexagon-socket-head bolts and four spacers are attached.)

Spacer

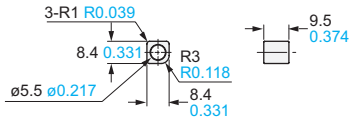

L-shaped mounting

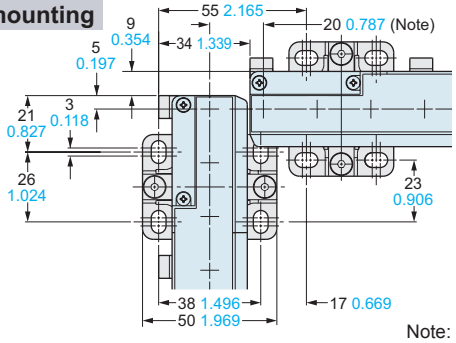

Mounting adjustment range

The adjustment range of the light curtain angle is up to ±15 degrees.

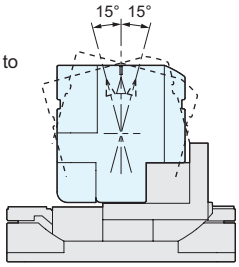

Note: The finger protection type has a beam pitch of 10 mm 0.394 in, which produces a dead zone. Additional measures will be required, such as using a protection cover.

MS-SF4BG-3

Dead zoneless mounting bracket (Optional)

Main body

It is only available for the robust **SF4B-□G<V2>**.

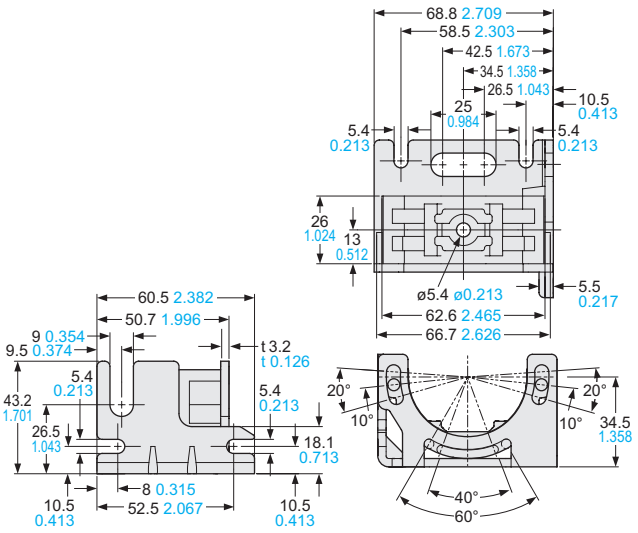

Material: Dead zoneless mounting bracket ··· SPCC (Trivalent chrome plated)
Dead zoneless supporting bracket ··· PPS

Mounting adjustment range

The adjustment range of the light curtain angle is up to ±10 degrees.

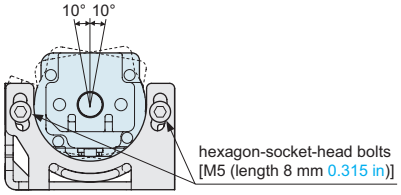

MS-SFB-4

Pitch adapter bracket (Optional)

Not available for the robust type **SF4B-□G<V2>**

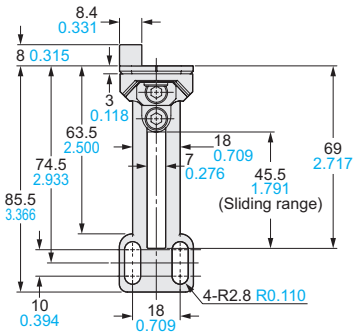

Material: Die-cast zinc alloy

Four bracket set
(Four M5 (length 18 mm 0.709 in) hexagon-socket-head bolts are attached.)

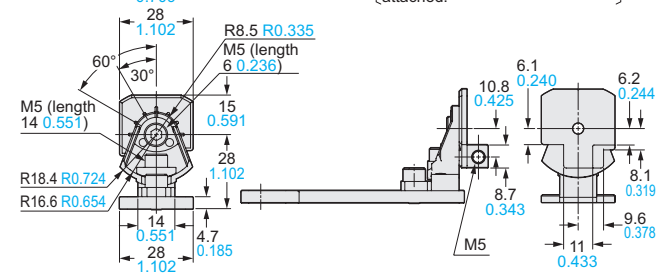

DIMENSIONS (Unit: mm in)

The CAD data in the dimensions can be downloaded from our website.

MS-SFB-4-T

Not available for the robust type **SF4B-□G<V2>**

M8 pitch adapter bracket (Optional)

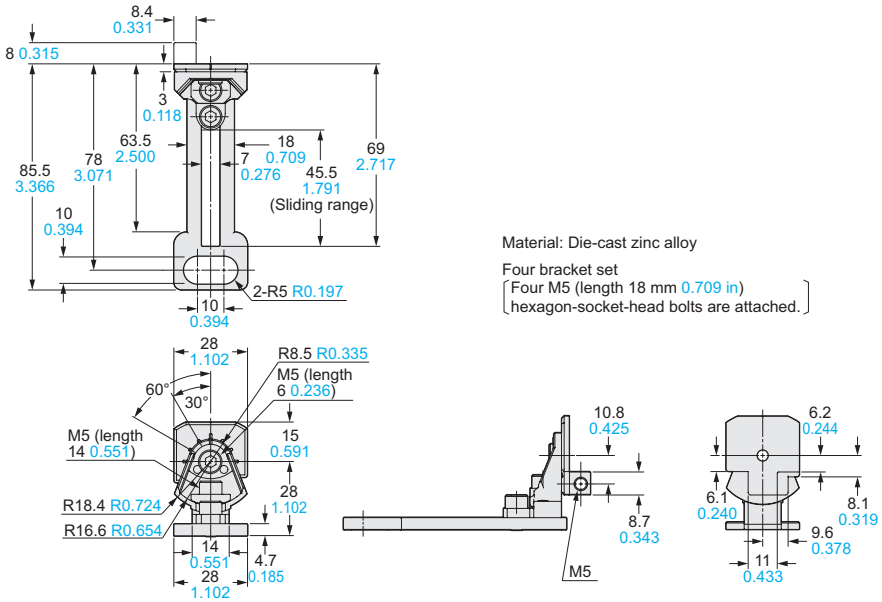

Material: Die-cast zinc alloy

Four bracket set
[Four M5 (length 18 mm 0.709 in) hexagon-socket-head bolts are attached.]

MS-SFB-7-T MS-SFB-1-T2 (Rear mounting)

M8 rear mounting bracket (Optional) M8 rear / side mounting brackets set (Optional)

Not available for the robust type **SF4B-□G<V2>**

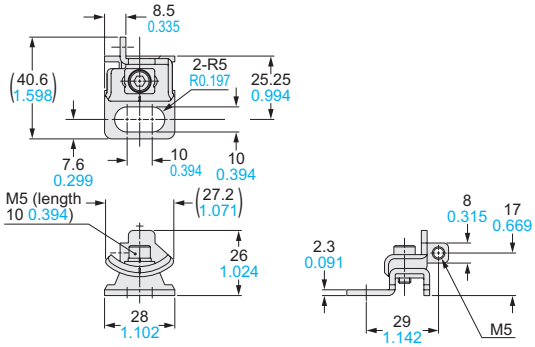

Material: Iron (Trivalent chrome plated)

Four bracket set
[Four M5 (length 18 mm 0.709 in) hexagon-socket-head bolts are attached.]

Mounting adjustment range

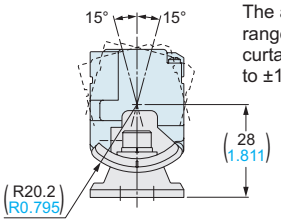

The adjustment range of the light curtain angle is up to ±15 degrees.

MS-SFB-8-T MS-SFB-1-T2 (Side mounting)

M8 side mounting bracket (Optional) M8 rear / side mounting brackets set (Optional)

Not available for the robust type **SF4B-□G<V2>**

MS-SFB-8-T(R)

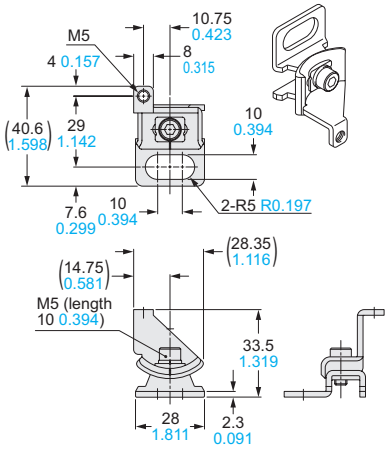

MS-SFB-8-T(L)

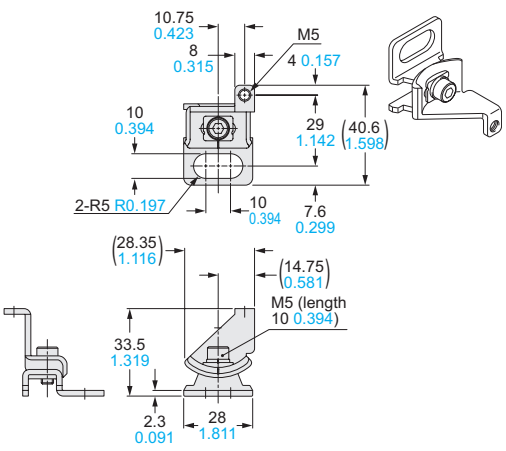

Mounting adjustment range

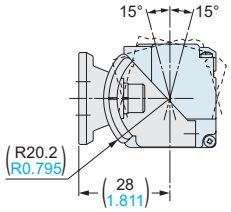

The adjustment range of the light curtain angle is up to ±15 degrees.

Material: Iron (Trivalent chrome plated)

Four bracket
(two pcs. each of R type and L type) set
[Four M5 (length 18 mm 0.709 in) hexagon-socket-head bolts are attached.]

DIMENSIONS (Unit: mm in)

The CAD data in the dimensions can be downloaded from our website.

SF-C11 Control unit (Optional)

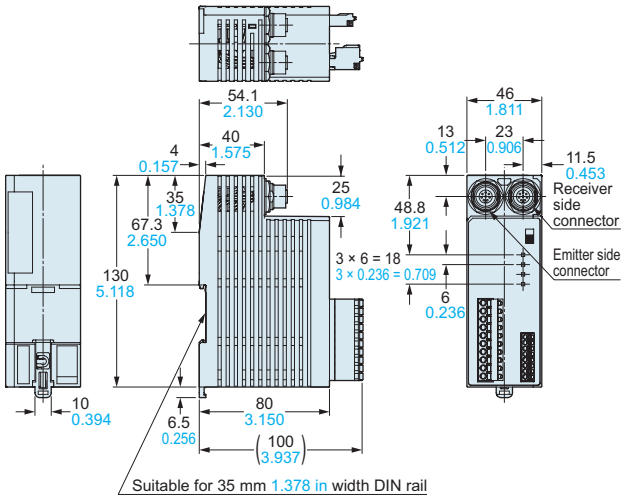

SF-C12 Control unit (Optional)

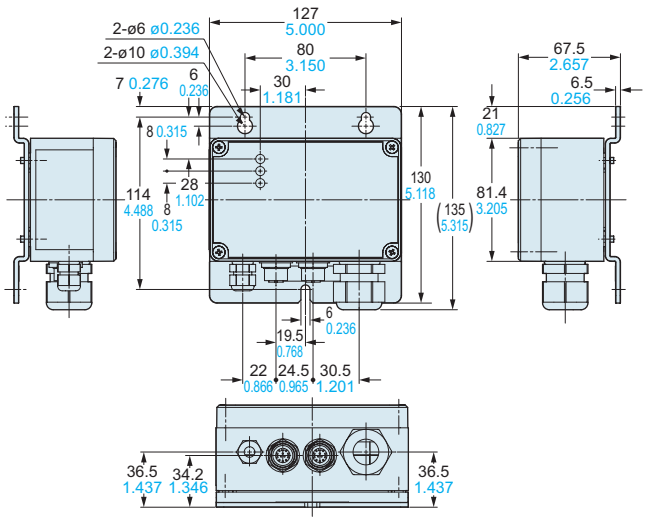

SF-C13 Control unit (Optional)

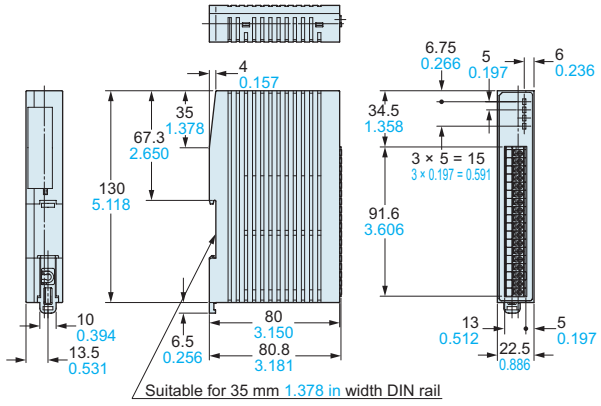

SF-C14EX(-01) Application expansion unit (Optional)

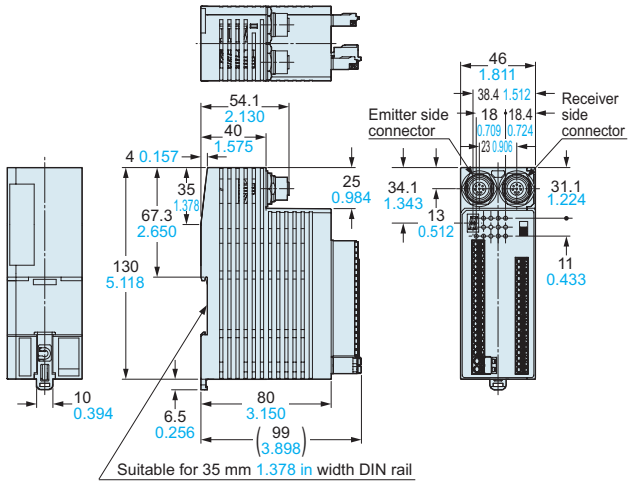

SFB-HC Handy-controller (Optional)

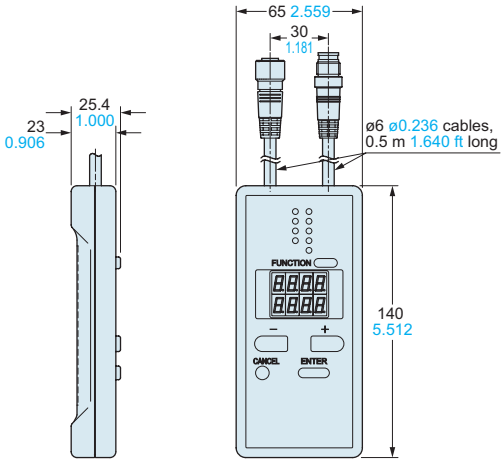

SFB-WY1 Y-shaped connector

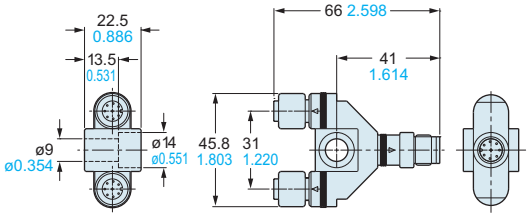

Net weight: 35 g approx.

DIMENSIONS (Unit: mm in)

The CAD data in the dimensions can be downloaded from our website.

SF-LAT-2N Laser alignment tool (Optional)

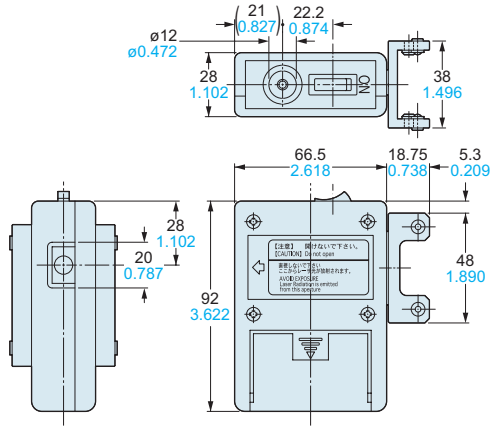

It is not available for the robust **SF4B-□G<V2>**.

SF-LAT-4BG Laser alignment tool (Optional)

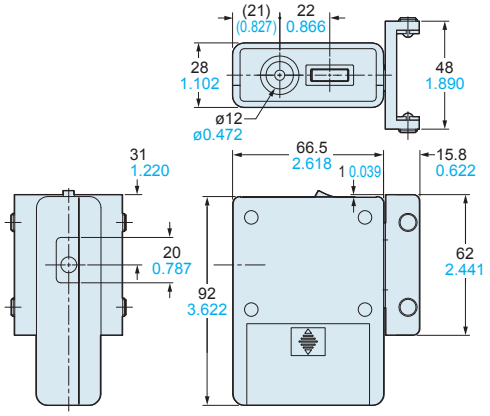

It is only available for the robust **SF4B-□G<V2>**.

SF-IND-2 Large display unit for light curtain (Optional)

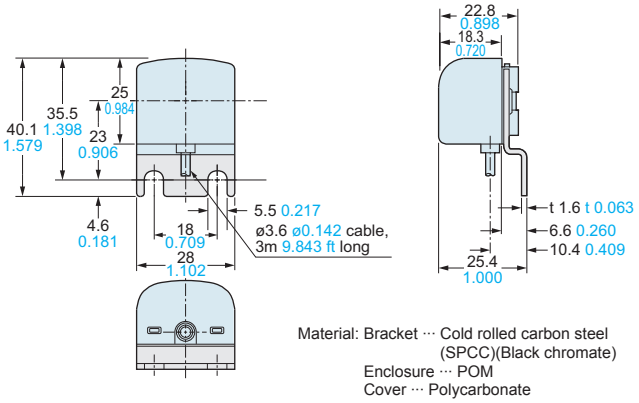

Material: Bracket ··· Cold rolled carbon steel (SPCC)(Black chromate)
Enclosure ··· POM
Cover ··· Polycarbonate

Please contact .....

Panasonic Electric Works SUNX Co., Ltd.
2431-1 Ushiyama-cho, Kasugai-shi, Aichi, 486-0901, Japan
■Telephone: +81-568-33-7211 ■Facsimile: +81-568-33-2631
Global Sales & Marketing Division
■Telephone: +81-568-33-7861 ■Facsimile: +81-568-33-8591
panasonic.co.jp/id/pidsx/global

Panasonic

All Rights Reserved ©Panasonic Electric Works SUNX Co., Ltd. 2012