IR06S-NO-RA12

Inductive Proximity Switch
3-Wire Ring Sensors
Operating principle: *Static*

Mind O≠0, I≠l≠1, S≠5, B≠8.

Ring diameter	⌀ 6.1 mm
Resolution	adjustable, ⌀ >1 mm
Operating voltage	10...30 V_{DC}
Reverse polarity protection	built-in
Current consumption	<10 mA
Current load capability	200 mA
Output function	normally open
Output polarity	NPN
Short circuit protection	built-in, self-resetting
Voltage drop	<2 V @ 200 mA
Adjustment	multi-turn potentiometer
Object speed	≤35 m/s · ≤115 ft/s
Response | release time	0.5 ms | 10 ms
Operating temperature	−20...+70 °C · −3...+159 °F
Protection class	IP67
Ring material	PA 6,6
Housing material	PBT
Switching indicator	built-in
Connection	male connector M12
Complies with	CE, RoHS

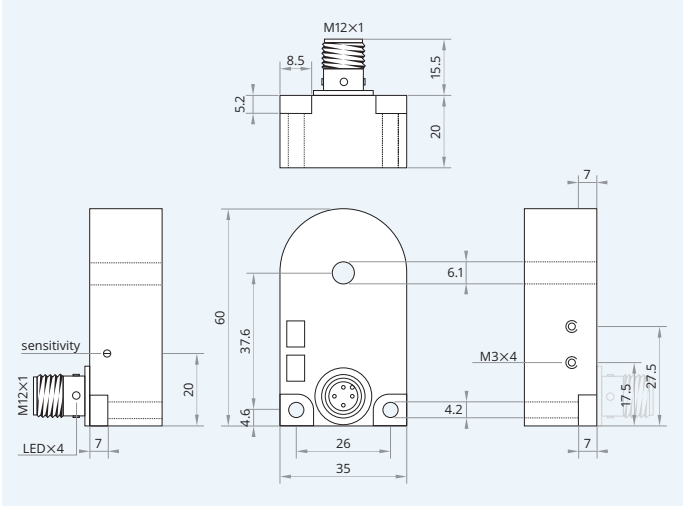

25 months **Warranty** Our products are manufactured to stringent ISO 9001 European standards to ensure that our customers only receive the best quality.

Wiring diagram

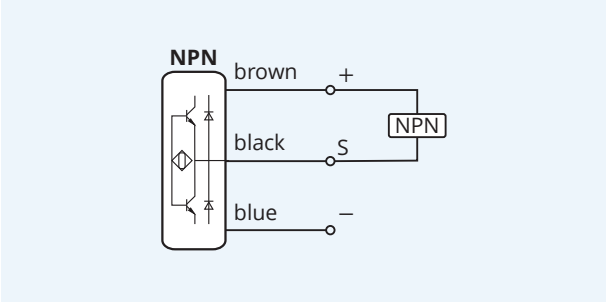

Pinout

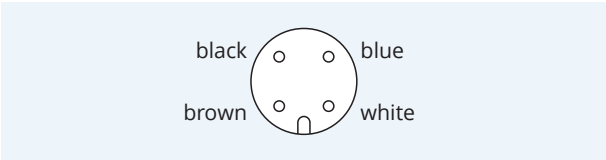

Caution! This device shall not be used if the safety of persons rely on its faultless function.

XECRO reserves the right to make minor changes without prior notification.