EL5101 | EtherCAT Terminal, 1-channel encoder interface, incremental, 5 V DC (DIFF RS422, TTL), 1 MHz

Image similar, may contain optional accessories

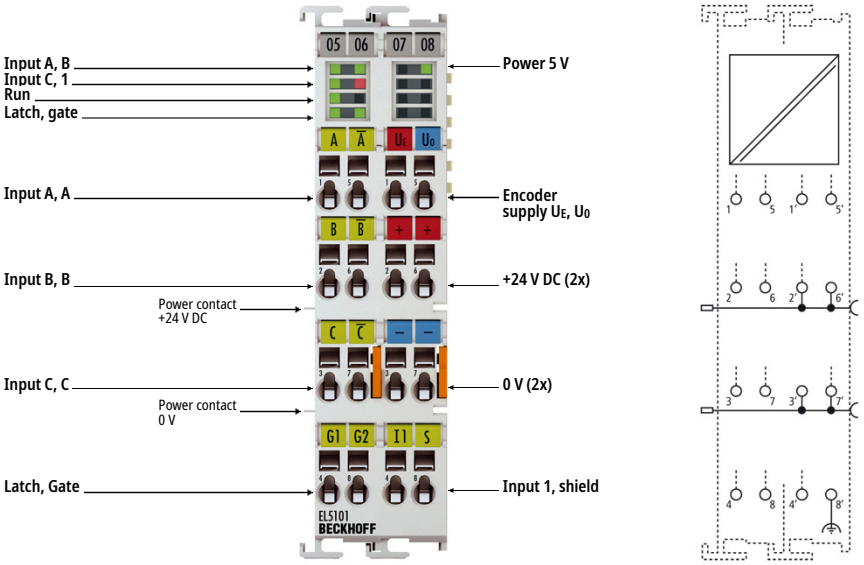

EL5101 | EtherCAT Terminal, 1-channel encoder interface, incremental, 5 V DC (DIFF RS422, TTL), 1 MHz

Product status: regular delivery

The EL5101 EtherCAT Terminal is an interface for the direct connection of incremental encoders with differential signals (RS422) or TTL single ended signals. Input frequencies up to 1 MHz can be evaluated. Two additional 24 V digital inputs are available for storing, blocking and setting the counter status. The error message output of an encoder can be connected and evaluated via the status input. The 5 V and 24 V supply of the encoder can be provided directly via the terminal connection points.

Special features:

- save, lock, set counter
- integrated frequency and period measurement
- optionally usable as 5 V up/down counter
- microincrements
- synchronous reading of the position value via distributed clocks
- timestamp on the last-registered incremental edge

In addition, the EL5101 enables the measurement of a period or frequency with a resolution of 100 ns. With the optional interpolating microincrement functionality, the EL5101 can provide even more accurate axis positions for dynamic axes. It also supports synchronous reading of the encoder value together with other input data in the EtherCAT system via the high-precision EtherCAT distributed clocks (DC). A timestamp for the last-registered incremental edge is also available. The use of encoder profiles enables simple and fast linking of the process data for motion control applications.

Product information

Technical data

Technical data	EL5101
Technology	incremental encoder interface, differential (RS422), single-ended (TTL), counter, pulse generator
Number of channels	1
Encoder connection	1 x A, B, C: differential inputs (RS422): A, $\bar{A}$ (inv), B, $\bar{B}$ (inv), C,$\bar{C}$ (inv), single-ended connection (TTL): A, B, C, counter, pulse generator: A, B
Additional inputs	status input 5 V DC, gate/latch input 24 V DC
Encoder operating voltage	5 V DC/max. 0.5 A (generated from the 24 V DC power contacts)
Counter	1 x 16/32 bit switchable
Cut-off frequency	4 million increments/s (with 4-fold evaluation), corresponding to 1 MHz
Quadrature decoder	4-fold evaluation
Distributed clocks	yes
Nominal voltage	24 V DC (-15%/+20%)
Resolution	1/256 bit microincrements
Current consumption power contacts	typ. 100 mA + load
Current consumption E-bus	typ. 130 mA
Electrical isolation	500 V (E-bus/field potential)
Special features	wire breakage detection, latch and gate function, period duration and frequency measurement, microincrements, timestamping of edges, filters
Weight	approx. 100 g
Operating temperature	-25...+60°C
Storage temperature	-40...+85°C
Relative humidity	95%, no condensation
Vibration/shock resistance	conforms to EN 60068-2-6/EN 60068-2-27
EMC immunity/emission	conforms to EN 61000-6-2/EN 61000-6-4
Protect. rating/installation pos.	IP20/variable
Pluggable wiring level	for all ESxxxx terminals
Approvals/markings	CE, CCC, UL, ATEX, IECEx, cFMus
Ex marking	ATEX: II 3G Ex ec IIC T4 Gc IECEx: Ex ec IIC T4 Gc cFMus: Class I, Division 2, Groups A, B, C, D Class I, Zone 2, AEx ec IIC T4 Gc

Housing data	EL-24-2x8pin	ES-24-2x8pin
Design form	compact terminal housing with signal LEDs	terminal housing with pluggable wiring level
Material	polycarbonate	
Installation	on 35 mm DIN rail, conforming to EN 60715 with lock	
Side by side mounting by means of	double slot and key connection	
Marking	labeling of the BZxxxx series	
Wiring	solid conductor (s), flexible conductor (st) and ferrule (f): spring actuation by screwdriver	
Connection cross-section	s*: 0.08...2.5 mm², st*: 0.08...2.5 mm², f*: 0.14...1.5 mm²	s*: 0.08...1.5 mm², st*: 0.08...1.5 mm², f*: 0.14...1.5 mm²
Connection cross-section AWG	s*: AWG28...14, st*: AWG28...14, f*: AWG26...16	s*: AWG28...16, st*: AWG28...16, f*: AWG26...16
Stripping length	8...9 mm	9...10 mm
Current load power contacts	I_{max}: 10 A	
Dimensions (W x H x D)	24 mm x 100 mm x 68 mm	

*s: solid wire; st: stranded wire; f: with ferrule

Ordering information

Ordering information	
EL5101	EtherCAT Terminal, 1-channel encoder interface, incremental, 5 V DC (DIFF RS422, TTL), 1 MHz
ES5101	EtherCAT Terminal, 1-channel encoder interface, incremental, 5 V DC (DIFF RS422, TTL), 1 MHz, pluggable wiring level

Material Compliance

Material compliance	EL5101
REACH SVHC	no
POP	compliant
RoHS	compliant with exemption
RoHS exemption	7c-I: Lead-containing electrical and electronic components in glass and ceramic materials, excluding dielectric ceramics in capacitors
China-RoHS	www.beckhoff.com/china-rohs-io
CA Prop65	www.beckhoff.com/prop65

Material compliance	EL5101
Disclaimer	This statement and the information contained above are, to the best of our knowledge and belief, accurate, based on the information we have received from our suppliers. This information is in line with the current standard of technology and our suppliers' technical documentation. The absence of the substances is not verified by Beckhoff Automation by means of analytical tests. When addressed to our customers any information contained in this document is subject to the terms and conditions expressed in the governing customer agreement. Our general terms and conditions apply.