EP2338-0002 | EtherCAT Box, 8-channel digital combi, 24 V DC, 10 µs, 0.5 A, M12

Image similar, may contain optional accessories

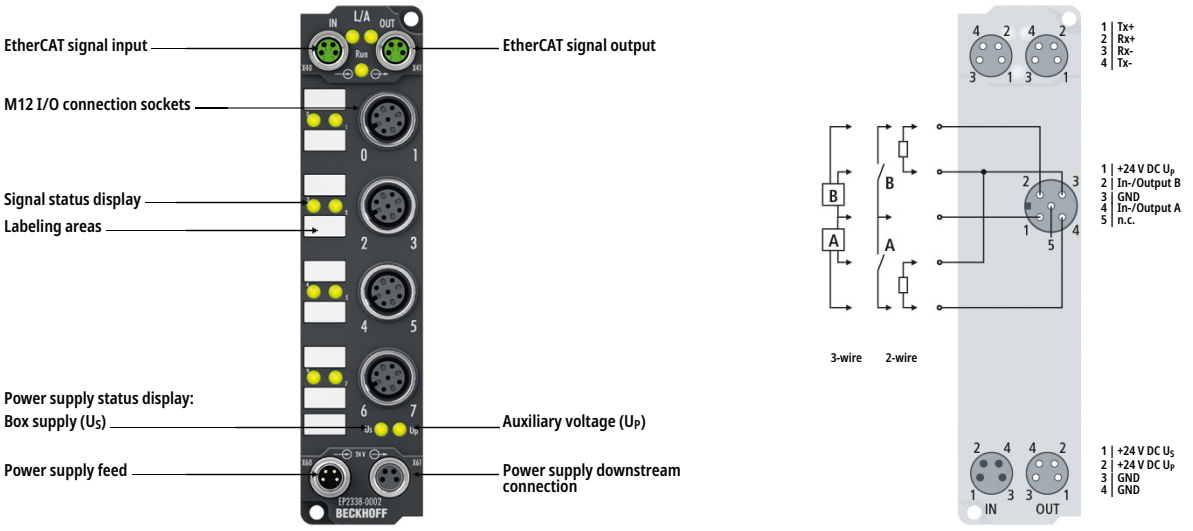

EP2338-0002 | EtherCAT Box, 8-channel digital combi, 24 V DC, 10 µs, 0.5 A, M12

Product status: regular delivery

The EP2338-0002 EtherCAT Box has eight digital channels that can each be operated as inputs or outputs. It is not necessary to configure whether a channel (pin 2 and 4 of the M12) is to be used as input or output; the input circuit is permanently connected internally to the output driver, so that a set output is automatically displayed in the input process image.

The inputs have a filter of 10 µs. The outputs handle load currents up to 0.5 A and are short-circuit proof and protected against reverse polarity. The sum current of all outputs is limited to 4 A.

The connected sensors are supplied by an internal, short-circuit-proof driver module with a total of 0.5 A for all sensors. The inputs and outputs are supplied via Up. The signal status is indicated by LEDs. The signals are connected via M12 connectors.

Product information

Technical data

Technical data	EP2338-0002
Protocol	EtherCAT
Bus interface	2 x M8 socket, 4-pin, A-coded, shielded
Specification	EN 61131-2, type 1/3
Number of channels	8 digital inputs or outputs

Technical data	EP2338-0002
Input/output connections	M12 x 1, 5-pin, a-coded
Input filter	typ. 10 µs
Signal voltage “0”	-3...+5 V
Signal voltage “1”	11...30 V, 6 mA input current (EN 61131-2, type 3)
Sensor supply	from load supply voltage, max. 0.5 A, short-circuit proof in total
Load type	resistive, inductive, lamp load
Rated load voltage	24 V DC (-15%/+20%)
Max. output current	0.5 A per channel, individually short-circuit proof
Switching times	typ. TON: 50 µs, typ. TOFF: 100 µs
Short-circuit current	typ. 1.5 A
Distributed clocks	–
Auxiliary power current	typ. 20 mA + load
Current consumption from Us	120 mA
Power supply connection	feed: 1 x M8 male socket, 4-pin, a-coded; downstream connection: 1 x M8 female socket, 4-pin, A-coded
Electrical isolation	500 V
Weight	approx. 165 g
Operating temperature	-25...+60°C
Storage temperature	-40...+85°C
Vibration/shock resistance	conforms to EN 60068-2-6/EN 60068-2-27
EMC immunity/emission	conforms to EN 61000-6-2/EN 61000-6-4
Protect. rating/installation pos.	IP65/66/67 (conforms to EN 60529)/variable
Approvals/markings	CE, CCC, UL, ATEX, IECEx, cFMus
Ex marking	ATEX: II 3G Ex ec IIC T4 Gc II 3D Ex tc IIIC T135°C Dc IECEx: Ex ec IIC T4 Gc Ex tc IIIC T135°C Dc cFMus: Class I, II, III, Division 2, Groups A, B, C, D, F and G Class I, Zone 2, AEx ec IIC T4 Gc Zone 22, AEx tc IIIC T135°C Dc

Housing data	8 x M8, 4 x M12
Dimensions (W x H x D)	30 mm x 126 mm x 26.5 mm
Material	PA6 (polyamide)
Installation	2 fixing holes 3.5 mm diameter for M3

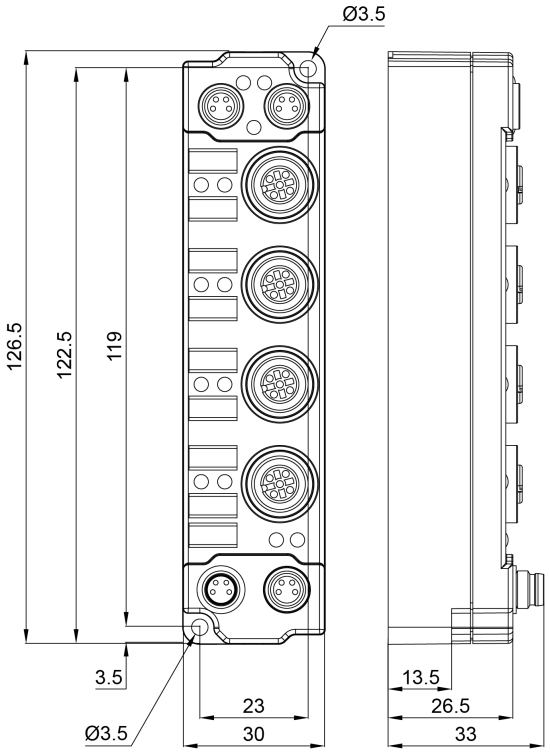

Material Compliance

Material compliance	EP2338-0002
CAS No.	7439-92-1, 115-86-6
REACH SVHC	Lead, Triphenyl phosphate
REACH Annex XVII	compliant
REACH Annex XIV	compliant
SCIP No.	SCIP submission in progress
POP	compliant
RoHS	compliant with exemption
RoHS exemption	6c: Copper alloy with a mass fraction of up to 4% lead, 7c-I: Lead-containing electrical and electronic components in glass and ceramic materials, excluding dielectric ceramics in capacitors
China-RoHS	www.beckhoff.com/china-rohs-io
CA Prop65	www.beckhoff.com/prop65
Disclaimer	This statement and the information contained above are, to the best of our knowledge and belief, accurate, based on the information we have received from our suppliers. This information is in line with the current standard of technology and our suppliers' technical documentation. The absence of the substances is not verified by Beckhoff Automation by means of analytical tests. When addressed to our customers any information contained in this document is subject to the terms and conditions expressed in the governing customer agreement. Our general terms and conditions apply.