EL2004 | EtherCAT Terminal, 4-channel digital output, 24 V DC, 0.5 A

Image similar, may contain optional accessories

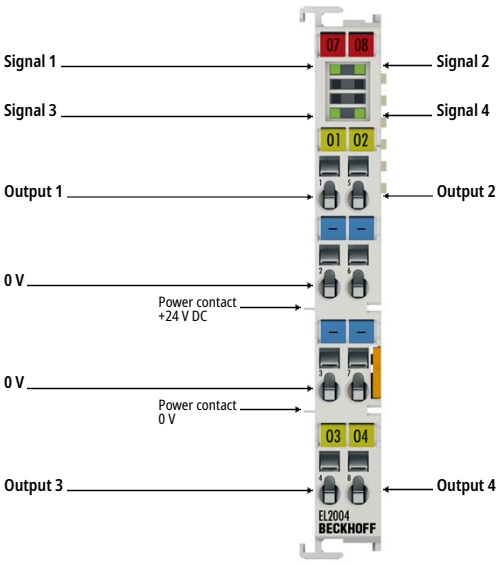

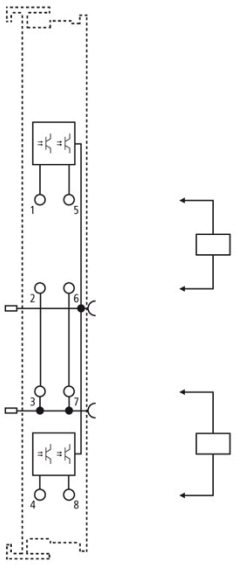

EL2004 | EtherCAT Terminal, 4-channel digital output, 24 V DC, 0.5 A

Product status: regular delivery

The EL2004 digital output terminal connects the binary 24 V DC control signals from the automation device on to the actuators at the process level with electrical isolation. The EtherCAT Terminal contains four channels that indicate its signal state by means of light emitting diodes.

Special features:

- connection of different load types possible (resistive, inductive, lamp load)
- max. output current 0.5 A per channel
- short-circuit-proof outputs and reverse polarity protection

Product information

Technical data

Technical data	EL2004
Connection technology	2-wire
Number of outputs	4
Nominal voltage	24 V DC (-15%/+20%)
Load type	resistive, inductive, lamp load

Technical data	EL2004
Distributed clocks	–
Max. output current	0.5 A (short-circuit proof) per channel
Short-circuit current	typ. < 2 A
Reverse polarity protection	yes
Switching-off energy	< 150 mJ/channel
Switching times	typ. TON: 60 µs, typ. TOFF: 300 µs
Current consumption E-bus	typ. 100 mA
Current consumption power contacts	typ. 15 mA + load
Bit width in the process image	4 outputs
Configuration	no address or configuration setting
Electrical isolation	500 V (E-bus/field potential)
Weight	approx. 55 g
Operating temperature	-25...+60°C
Storage temperature	-40...+85°C
Relative humidity	95%, no condensation
Vibration/shock resistance	conforms to EN 60068-2-6/EN 60068-2-27
EMC immunity/emission	conforms to EN 61000-6-2/EN 61000-6-4
Protect. rating/installation pos.	IP20/variable
Pluggable wiring level	for all ESxxxx terminals
Approvals/markings	CE, CCC, UL, ATEX, IECEx, DNV, cFMus
Ex marking	ATEX: II 3G Ex ec IIC T4 Gc IECEx: Ex ec IIC T4 Gc cFMus: Class I, Division 2, Groups A, B, C, D Class I, Zone 2, AEx ec IIC T4 Gc

Housing data	EL-12-8pin	ES-12-8pin
Design form	compact terminal housing with signal LEDs	terminal housing with pluggable wiring level
Material	polycarbonate	
Installation	on 35 mm DIN rail, conforming to EN 60715 with lock	
Side by side mounting by means of	double slot and key connection	
Marking	labeling of the BZxxxx series	
Wiring	solid conductor (s), flexible conductor (st) and ferrule (f): spring actuation by screwdriver	
Connection cross-section	s*: 0.08...2.5 mm^2, st*: 0.08...2.5 mm^2, f*: 0.14...1.5 mm^2	s*: 0.08...1.5 mm^2, st*: 0.08...1.5 mm^2, f*: 0.14...1.5 mm^2

Housing data	EL-12-8pin	ES-12-8pin
Connection cross-section AWG	s*: AWG28...14, st*: AWG28...14, f*: AWG26...16	s*: AWG28...16, st*: AWG28...16, f*: AWG26...16
Stripping length	8...9 mm	9...10 mm
Current load power contacts	I_{max}: 10 A	
Dimensions (W x H x D)	12 mm x 100 mm x 68 mm	

*s: solid wire; st: stranded wire; f: with ferrule

Ordering information

Ordering information	
EL2004	EtherCAT Terminal, 4-channel digital output, 24 V DC, 0.5 A
ES2004	EtherCAT Terminal, 4-channel digital output, 24 V DC, 0.5 A, pluggable wiring level

Material Compliance

Material compliance	EL2004
REACH SVHC	no
POP	compliant
RoHS	compliant with exemption
RoHS exemption	7c-I: Lead-containing electrical and electronic components in glass and ceramic materials, excluding dielectric ceramics in capacitors
China-RoHS	www.beckhoff.com/china-rohs-io
CA Prop65	www.beckhoff.com/prop65
Disclaimer	This statement and the information contained above are, to the best of our knowledge and belief, accurate, based on the information we have received from our suppliers. This information is in line with the current standard of technology and our suppliers' technical documentation. The absence of the substances is not verified by Beckhoff Automation by means of analytical tests. When addressed to our customers any information contained in this document is subject to the terms and conditions expressed in the governing customer agreement. Our general terms and conditions apply.