KL3052 | Bus Terminal, 2-channel analog input, current, 4...20 mA, 12 bit, single-ended

Image similar, may contain optional accessories

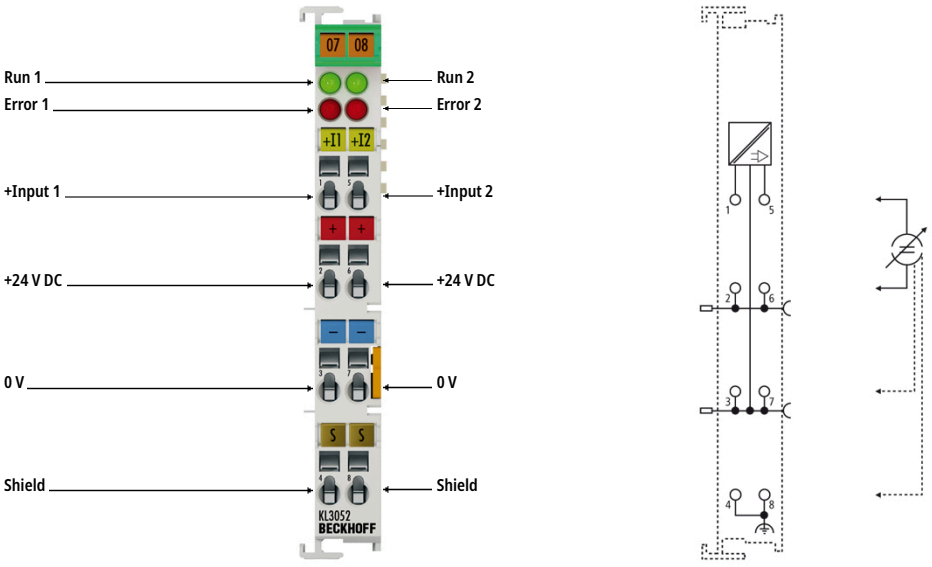

KL3052 | Bus Terminal, 2-channel analog input, current, 4...20 mA, 12 bit, single-ended

Product status: regular delivery

The job of the KL3052 analog input terminal is to supply power to measuring transducers located in the field and to transmit analog measurement signals with electrical isolation to the automation device. The voltage for the sensors is supplied to the terminal via the power contacts. The power contacts can optionally be supplied with operating voltage in the standard way or via a power feed terminal (KL9xxx) with electrical isolation. The input electronics is independent of the supply voltage of the power contacts. The 0 V rail is the reference potential for the inputs. The run LEDs give an indication of the data exchange with the Bus Coupler. The error LEDs indicate an overload condition and a broken wire.

Product information

Technical data

Technical data	KL3052
Number of inputs	2
Power supply	24 V DC via power contacts
Signal current	4...20 mA
Technology	single-ended
Internal resistance	80 Ω + diode voltage 0.7 V
Common mode voltage U_{CM}	–

Technical data	KL3052
Conversion time	~ 2 ms
Resolution	12 bit
Measurement error/uncertainty	< ±0.3% (relative to full scale value)
Surge voltage resistance	max. 35 V
Electrical isolation	500 V (K-bus/signal voltage)
Current consumption power contacts	load only
Current consumption K-bus	typ. 65 mA
Bit width in the process image	input: 2 x 16 bit data (2 x 8 bit control/status optional)
Configuration	no address or configuration setting
Special features	with sensor supply
Weight	approx. 70 g
Operating temperature	-25...+60°C
Storage temperature	-40...+85°C
Relative humidity	95%, no condensation
Vibration/shock resistance	conforms to EN 60068-2-6/EN 60068-2-27
EMC immunity/emission	conforms to EN 61000-6-2/EN 61000-6-4
Protect. rating/installation pos.	IP20/variable
Pluggable wiring level	for all KSxxxx Bus Terminals
Approvals/markings	CE, CCC, UL, ATEX, IECEx, DNV, cFMus
Ex marking	ATEX: II 3G Ex ec IIC T4 Gc IECEx: Ex ec IIC T4 Gc cFMus: Class I, Division 2, Groups A, B, C, D Class I, Zone 2, AEx ec IIC T4 Gc

Housing data	KL-12-8pin	KS-12-8pin
Design form	compact terminal housing with signal LEDs	terminal housing with pluggable wiring level
Material	polycarbonate	
Installation	on 35 mm DIN rail, conforming to EN 60715 with lock	
Side by side mounting by means of	double slot and key connection	
Marking	labeling of the BZxxxx series	
Wiring	solid conductor (s), flexible conductor (st) and ferrule (f): spring actuation by screwdriver	
Connection cross-section	s*: 0.08...2.5 mm^2, st*: 0.08...2.5 mm^2, f*: 0.14...1.5 mm^2	s*: 0.08...1.5 mm^2, st*: 0.08...1.5 mm^2, f*: 0.14...1.5 mm^2

Housing data	KL-12-8pin	KS-12-8pin
Connection cross-section AWG	s*: AWG28...14, st*: AWG28...14, f*: AWG26...16	s*: AWG28...16, st*: AWG28...16, f*: AWG26...16
Stripping length	8...9 mm	9...10 mm
Current load power contacts	I_{max}: 10 A	
Dimensions (W x H x D)	12 mm x 100 mm x 68 mm	

*s: solid wire; st: stranded wire; f: with ferrule

Ordering information

Ordering information	
KL3052	Bus Terminal, 2-channel analog input, current, 4...20 mA, 12 bit, single-ended
KS3052	Bus Terminal, 2-channel analog input, current, 4...20 mA, 12 bit, single-ended, pluggable wiring level
KL3052-0010	Bus Terminal, 2-channel analog input, current, 4...20 mA, 12 bit, single-ended, Siemens S5 format
KL3052-0011	Bus Terminal, 2-channel analog input, current, 4...20 mA, 12 bit, single-ended, conversion time typ. 0.5 ms
KL3052-0012	Bus Terminal, 2-channel analog input, current, 3.5...21.5 mA, 12 bit, single-ended
KL3052-0050	Bus Terminal, 2-channel analog input, current, 4...20 mA, 12 bit, single-ended, Siemens S7 format

Material Compliance

Material compliance	KL3052
REACH SVHC	no
POP	compliant
RoHS	compliant with exemption
RoHS exemption	7c-I: Lead-containing electrical and electronic components in glass and ceramic materials, excluding dielectric ceramics in capacitors
China-RoHS	www.beckhoff.com/china-rohs-io
CA Prop65	www.beckhoff.com/prop65
Disclaimer	This statement and the information contained above are, to the best of our knowledge and belief, accurate, based on the information we have received from our suppliers. This information is in line with the current standard of technology and our suppliers' technical documentation. The absence of the substances is not verified by Beckhoff Automation by means of analytical tests. When addressed to our customers any information contained in this document is subject to the terms and conditions expressed in the governing customer agreement. Our general terms and conditions apply.