EL2904 | EtherCAT Terminal, 4-channel digital output, 24 V DC, 0.5 A, TwinSAFE

Image similar, may contain optional accessories

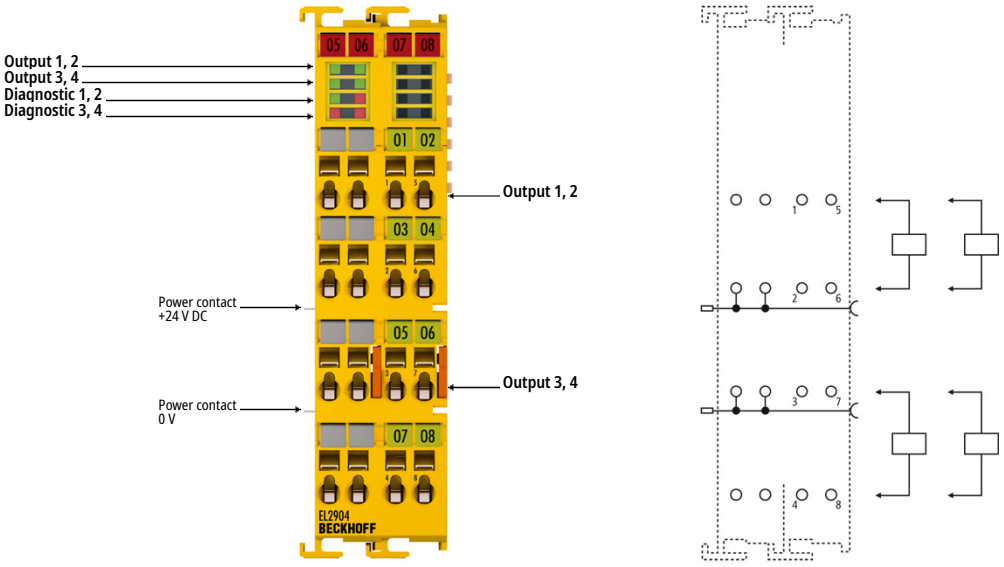

EL2904 | EtherCAT Terminal, 4-channel digital output, 24 V DC, 0.5 A, TwinSAFE

Product status: regular delivery

The EL2904 TwinSAFE component is a digital output terminal with four channels. It switches 24 V DC actuators with up to 0.5 A per channel and has four fail-safe outputs. The outputs are controlled by a TwinSAFE Logic-capable component via FSoE. The component automatically switches off if it detects an error (fail-stop).

The EL2904 has safety parameters to specifically adapt the functionality to the respective safety requirements. For example, a current measurement at the outputs and a test of the outputs can be configured in order to be able to detect cross-circuits among other things and to react appropriately.

In addition, standard outputs can be activated for the EL2904. As a result, corresponding standard outputs are available in the process image in parallel and internally ANDed with the safe outputs of the EL2904. The safe output signals, which are controlled by a TwinSAFE Logic, thus issue the safe release for the standard signals, which can be triggered by the non-safety oriented control system independently of the cycle of the safety controller and FSoE. This allows faster switching times of the outputs, provided that the safety controller issues the necessary release for the output.

The safety parameters are not stored directly on the component, but are transmitted to the component via a TwinSAFE Logic-capable component when the safety application is started. This simplifies service procedures, because the component can simply be replaced. The safety-relevant parameters are transferred to the new component when the safety application is restarted.

Special features:

- 4 safe outputs
- integrated current measurement
- testing of the channels can be activated
- Standard outputs can be activated with integrated AND connection with a safe output signal

Product information

Technical data

Technical data	EL2904
Connection technology	1-/2-wire
Specification	output of output signals
Number of outputs	4
Max. output current	0.5 A (per channel), min. 20 mA (with active current measurement)
Protocol	TwinSAFE/Safety over EtherCAT
Fault response time	≤ watchdog time (parameterizable)
Current consumption power contacts	load-dependent
Current consumption E-bus	typ. 221 mA
Installation position	horizontal
Safety standard	DIN EN ISO 13849-1:2008 (Cat. 4, PL e) and EN 61508:2010 (SIL 3)
Weight	approx. 100 g
Protection rating	IP20
Ex marking	ATEX: II 3G Ex ec IIC T4 Gc IECEx: Ex ec IIC T4 Gc cFMus: Class I, Division 2, Groups A, B, C, D Class I, Zone 2, AEx ec IIC T4 Gc

Housing data	EL-24-2x8pin
Design form	compact terminal housing with signal LEDs
Material	polycarbonate
Installation	on 35 mm DIN rail, conforming to EN 60715 with lock
Side by side mounting by means of	double slot and key connection
Marking	labeling of the BZxxxx series
Wiring	solid conductor (s), flexible conductor (st) and ferrule (f): spring actuation by screwdriver
Connection cross-section	s*: 0.08...2.5 mm^2, st*: 0.08...2.5 mm^2, f*: 0.14...1.5 mm^2
Connection cross-section AWG	s*: AWG28...14, st*: AWG28...14, f*: AWG26...16
Stripping length	8...9 mm
Current load power contacts	I_{max}: 10 A

Housing data	EL-24-2x8pin
Dimensions (W x H x D)	24 mm x 100 mm x 68 mm

*s: solid wire; st: stranded wire; f: with ferrule

Material Compliance

Material compliance	EL2904
REACH SVHC	no
POP	compliant
RoHS	compliant with exemption
RoHS exemption	7c-I: Lead-containing electrical and electronic components in glass and ceramic materials, excluding dielectric ceramics in capacitors
China-RoHS	www.beckhoff.com/china-rohs-io
CA Prop65	www.beckhoff.com/prop65
Disclaimer	This statement and the information contained above are, to the best of our knowledge and belief, accurate, based on the information we have received from our suppliers. This information is in line with the current standard of technology and our suppliers' technical documentation. The absence of the substances is not verified by Beckhoff Automation by means of analytical tests. When addressed to our customers any information contained in this document is subject to the terms and conditions expressed in the governing customer agreement. Our general terms and conditions apply.