Dimensions

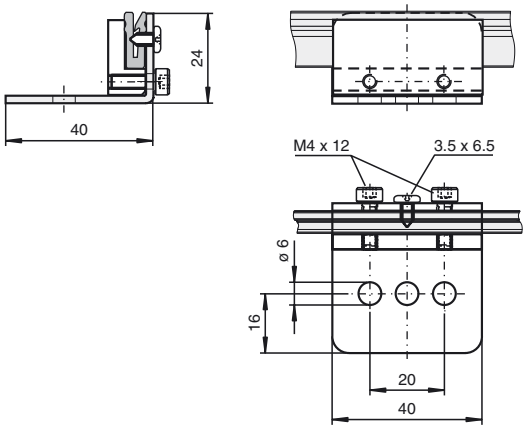

Model number

WCS-MB1-B

Fastening angle for screw connection, curve

Features

- Mounting bracket for code rail, bend
- Supplied with M6 mounting screws

Matching system components

WCS3-CS70-M1-1000FT
Code rail, stainless steel

WCS2-CS55-L1
Laminate type, 55 mm

WCS2-CS55-M1
Stainless steel type, 55 mm

WCS2-CS70-L1
Laminate type, 70 mm

WCS2-CS70-M1
Stainless steel type, 70 mm

WCS3-CS70-L*
Code rail, polyester laminate

WCS3-CS70-M1
Code rail, stainless steel

WCS-SP2
Stabilization profile

Technical data

Ambient conditions	
Ambient temperature	-40 ... 100 °C (-40 ... 212 °F)
Mechanical specifications	
Material thickness	2 mm
Material	Metal sheet (steel), zinc-plated
Mass	85 g (without fastening screws)

Release date: 2019-04-02 13:12 Date of issue: 2019-04-02 184100_eng.xml